VELUX®

HFC/HVC + EWC

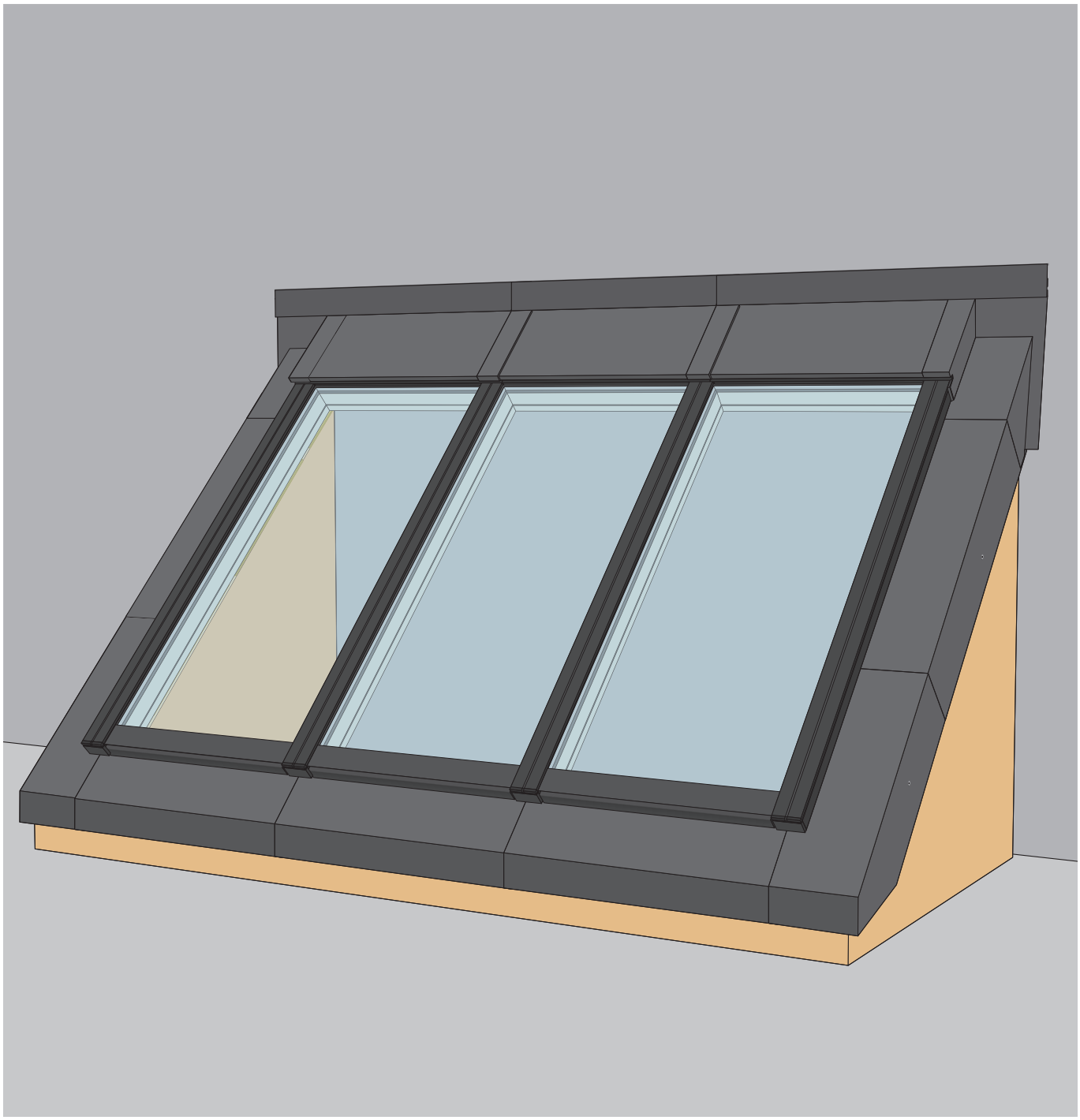

5°-40°

VAS 453829-2016-05

A1-W

HVC CE all

HFC/HVC + EWC

M8 x 20 mm

A2-W

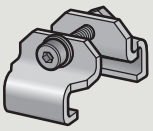

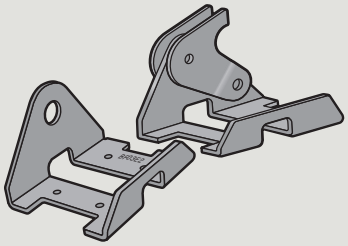

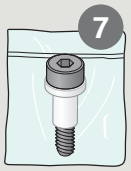

M8 x 30 mm

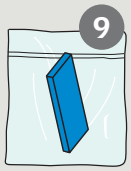

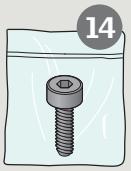

M8 x 14 mm

B1-W

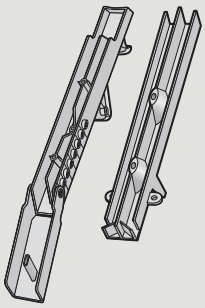

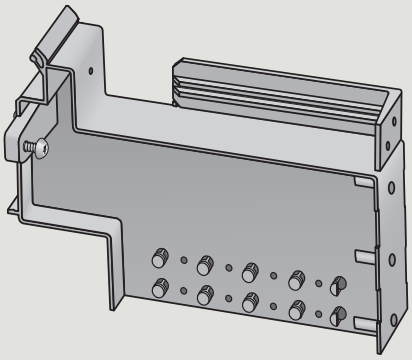

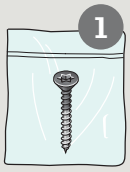

4,2 x 25 mm

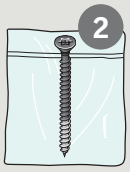

4,3 x 45 mm

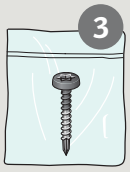

4,2 x 25 mm

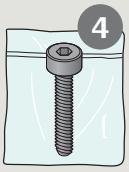

M6 x 35 mm

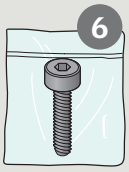

M8 x 30 mm

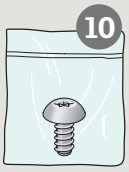

6,5 x 10 mm

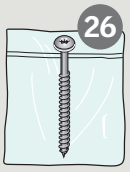

4 x 50 mm

C1-W

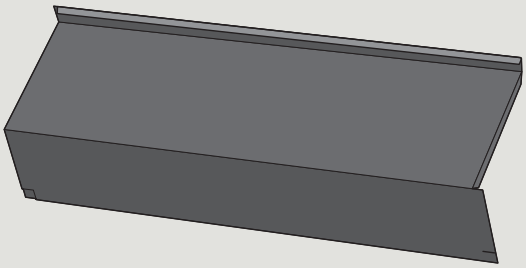

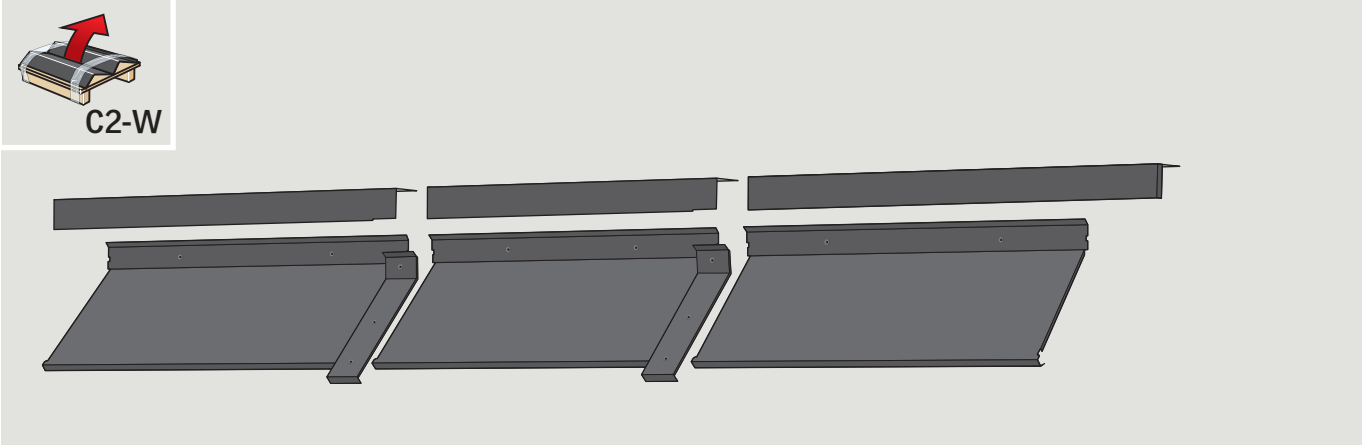
C2-W

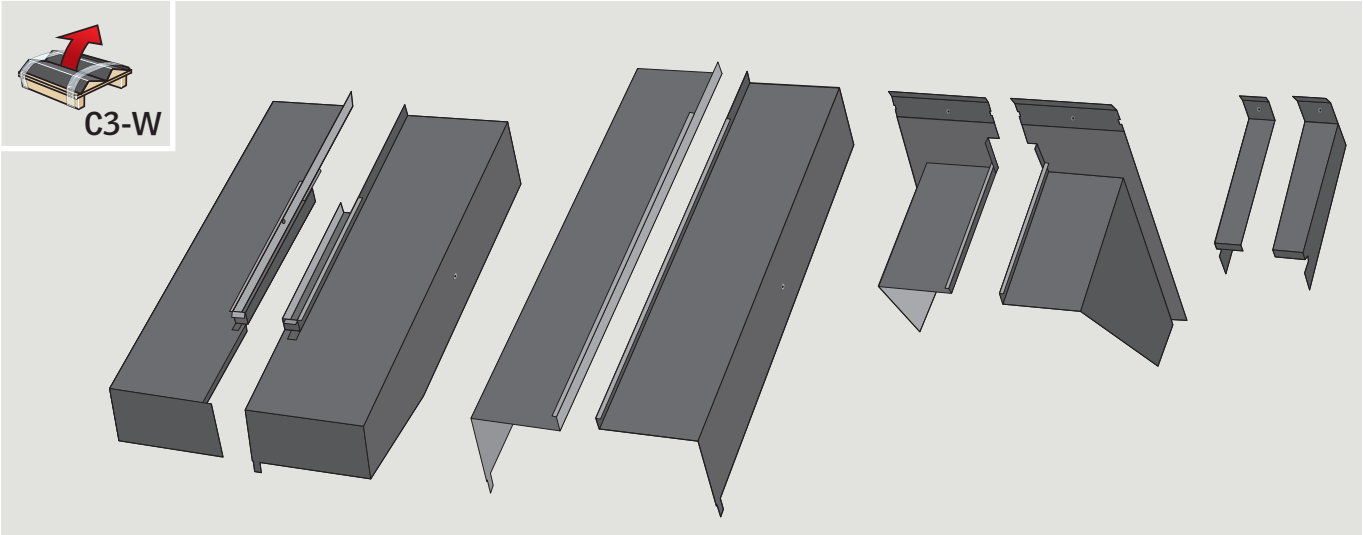
C3-W

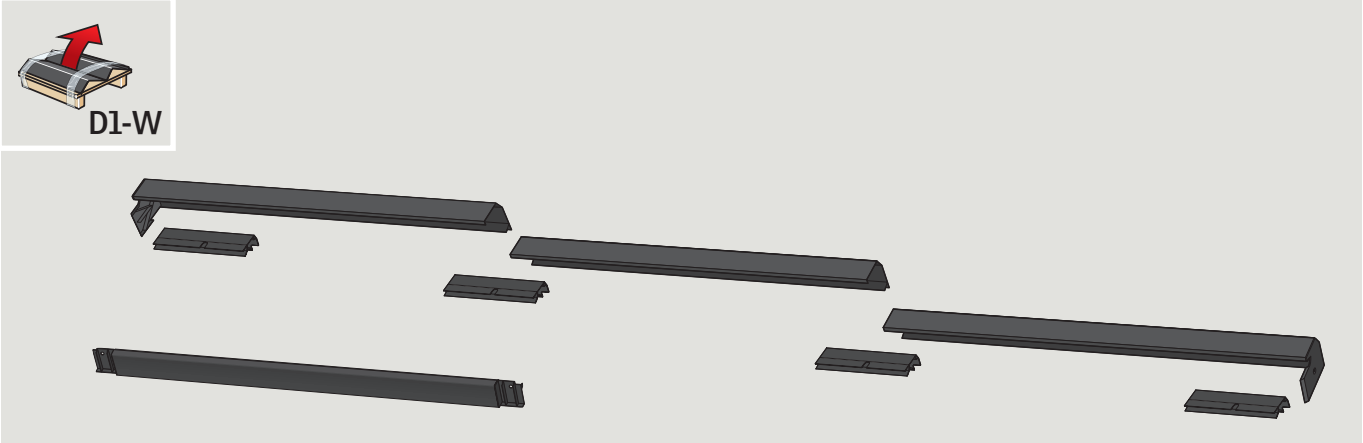
D1-W

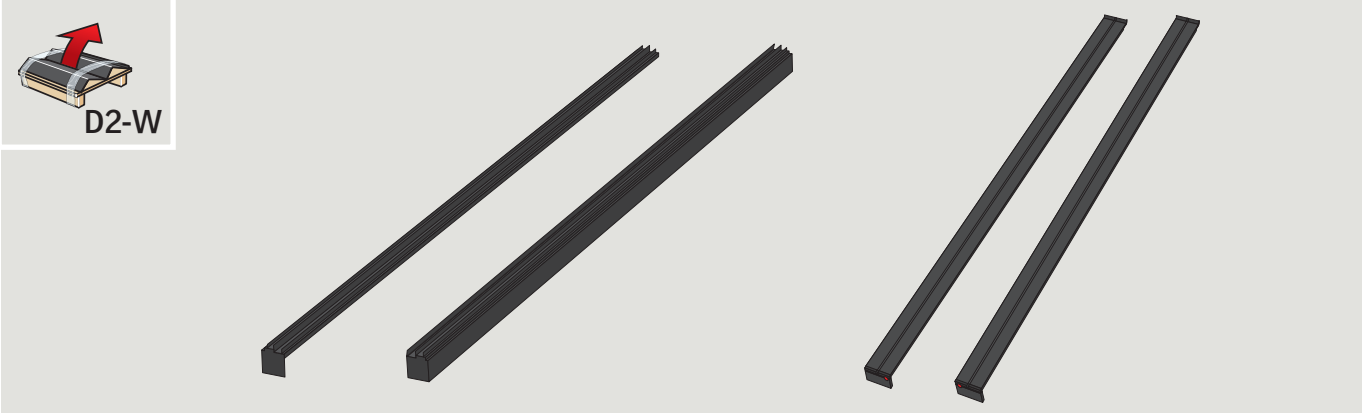
D2-W

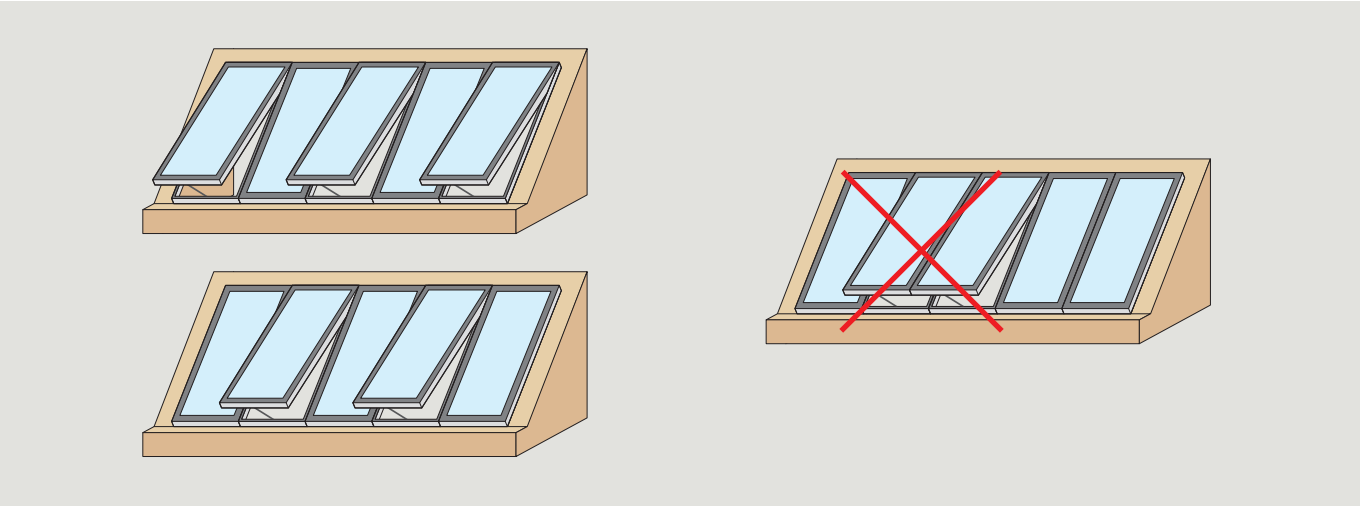

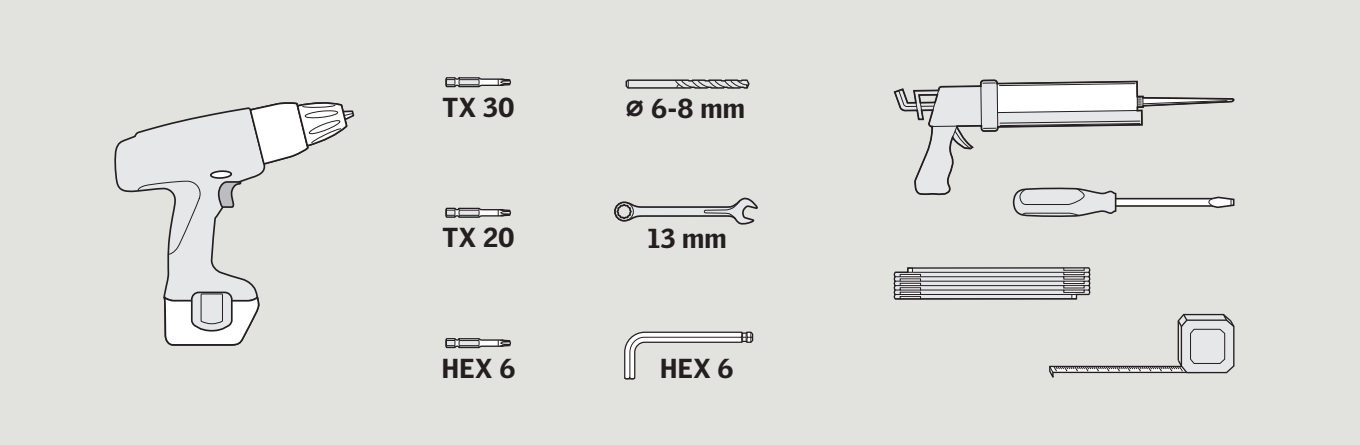

BCX

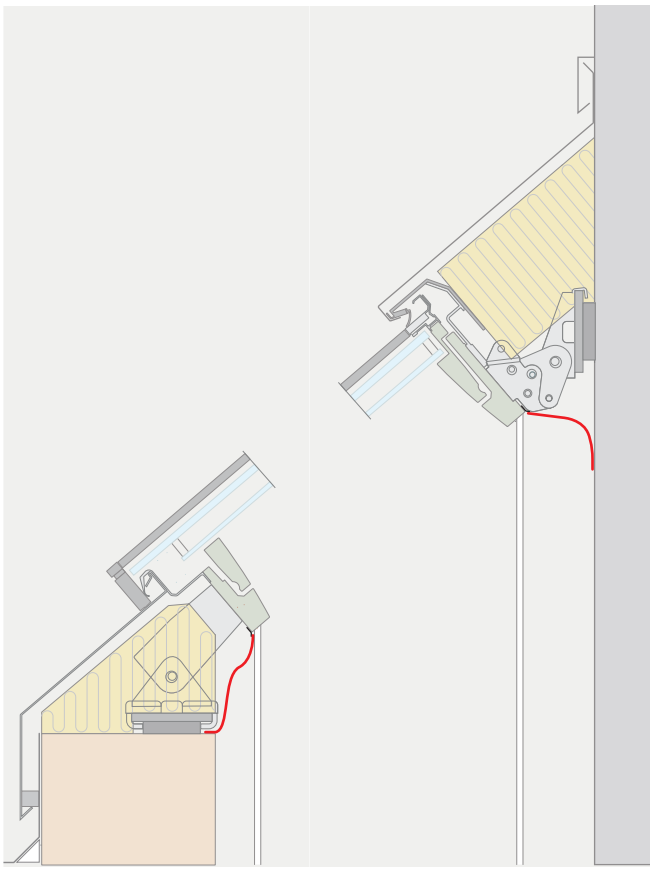

25°-40°

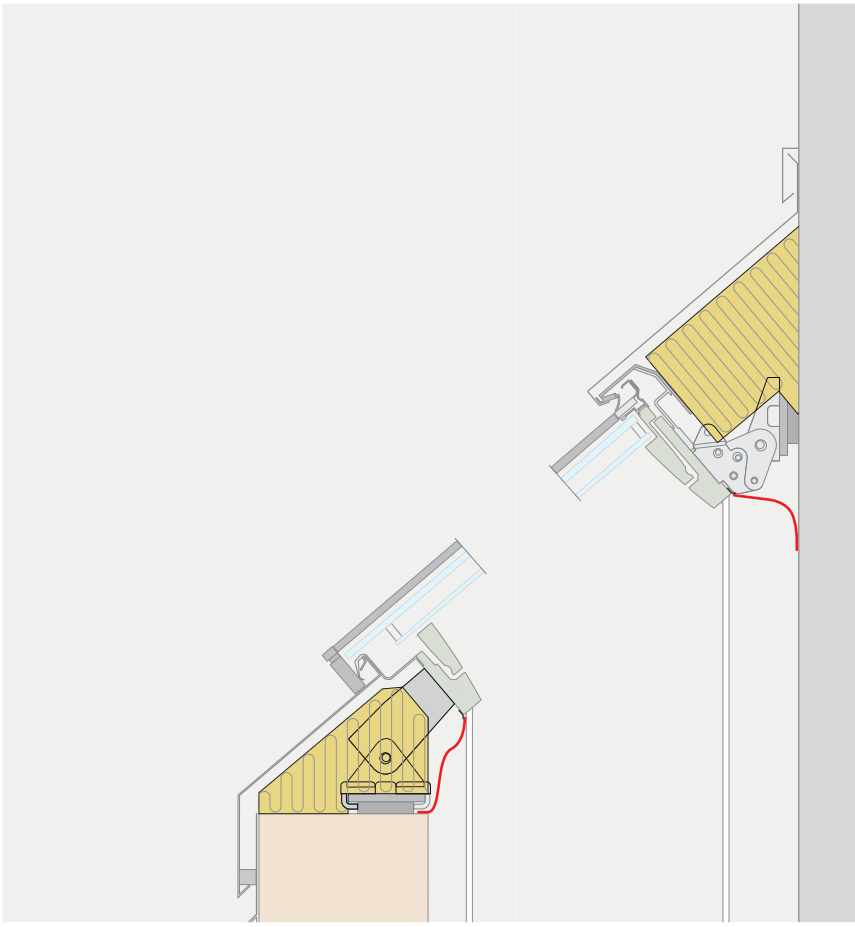

5°-24°

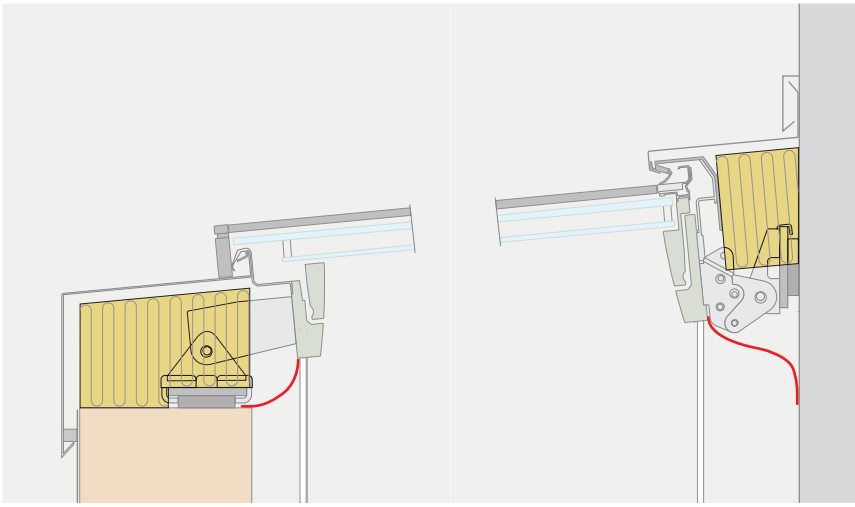

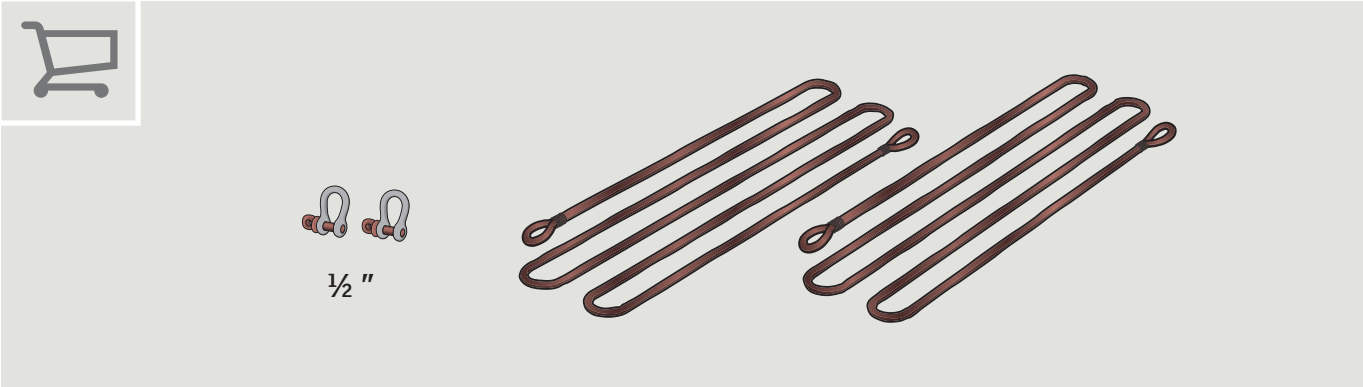
½ ″

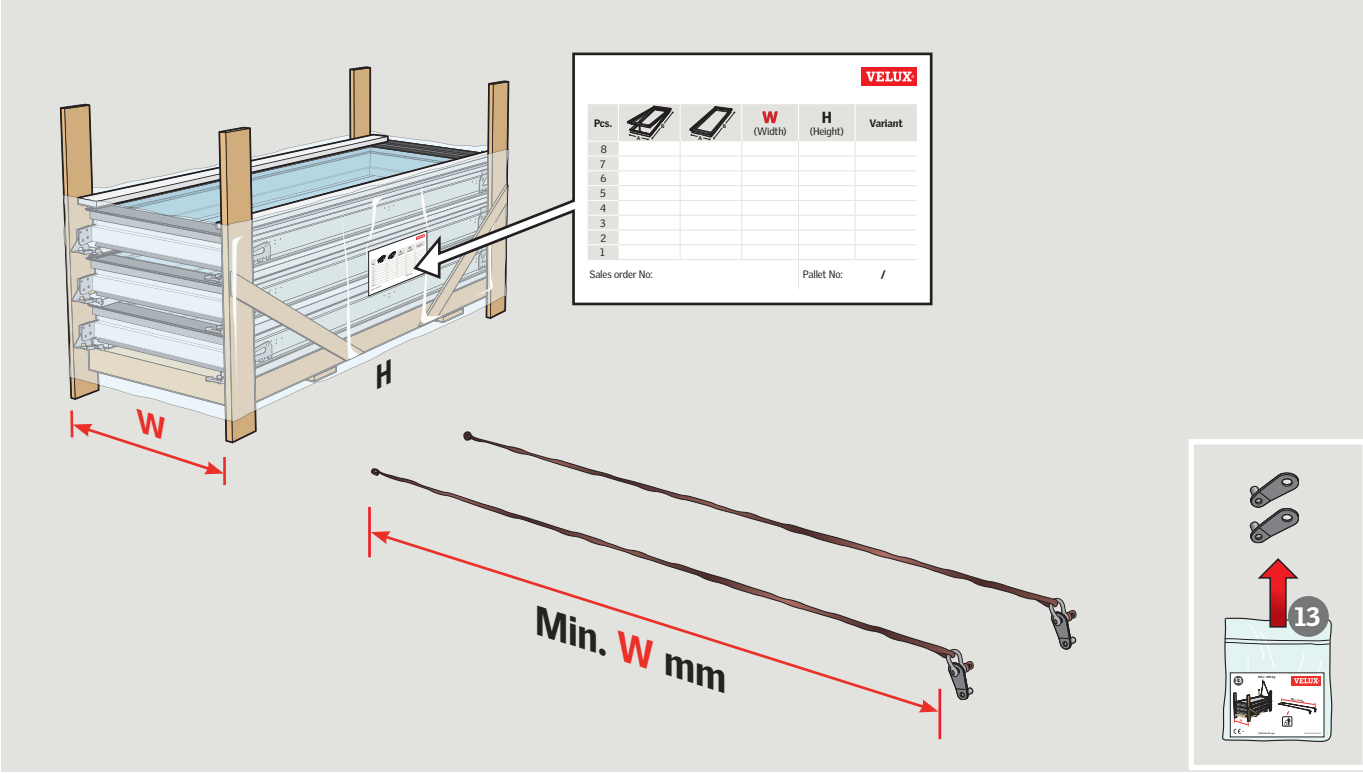
VELUX
Pcs.
W
(Width)
H
(Height)
Variant
8
7
6
5
4
3
2
1
Sales order No:
Pallet No:
/
W
H
Min. W mm
13

1

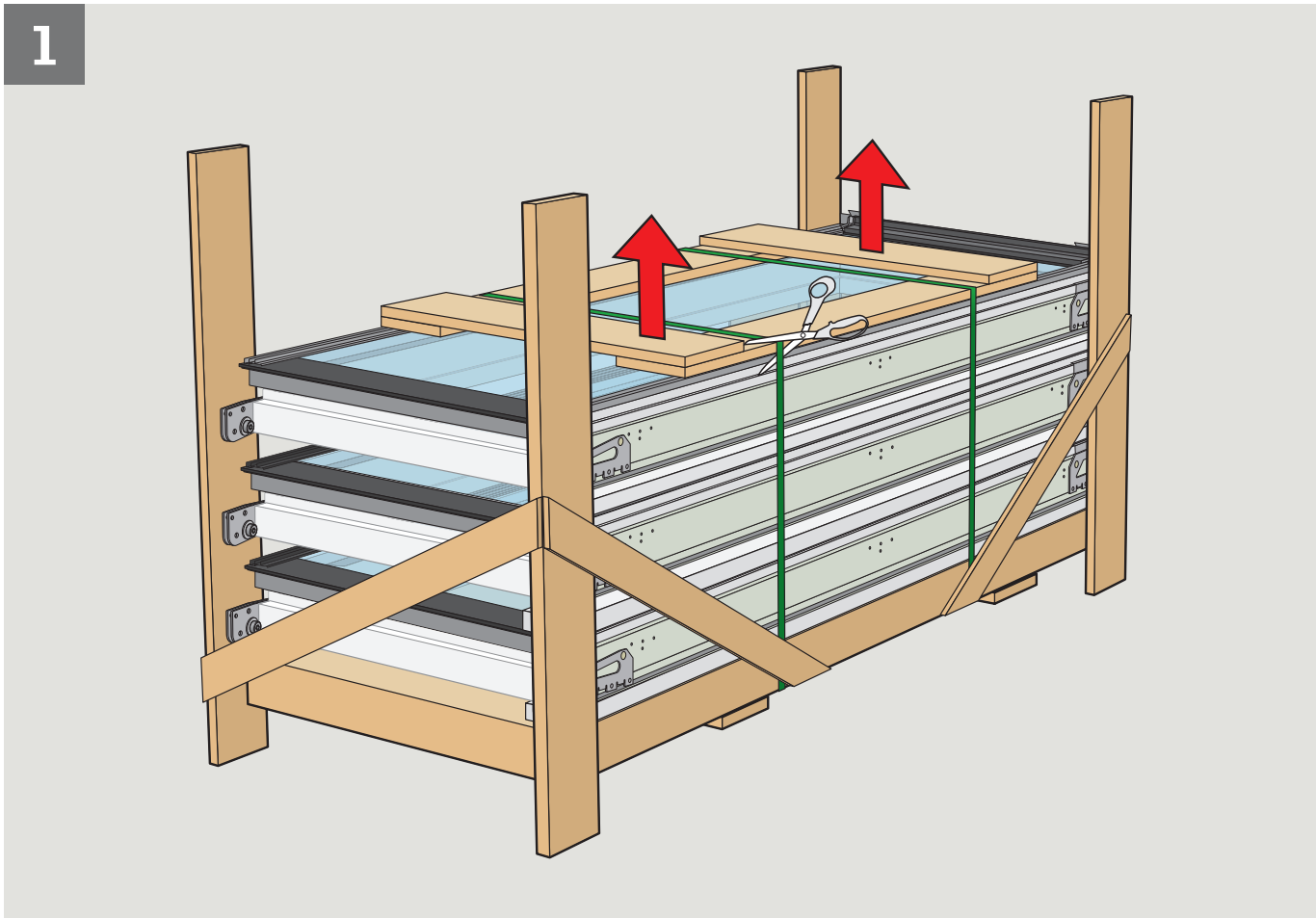

2

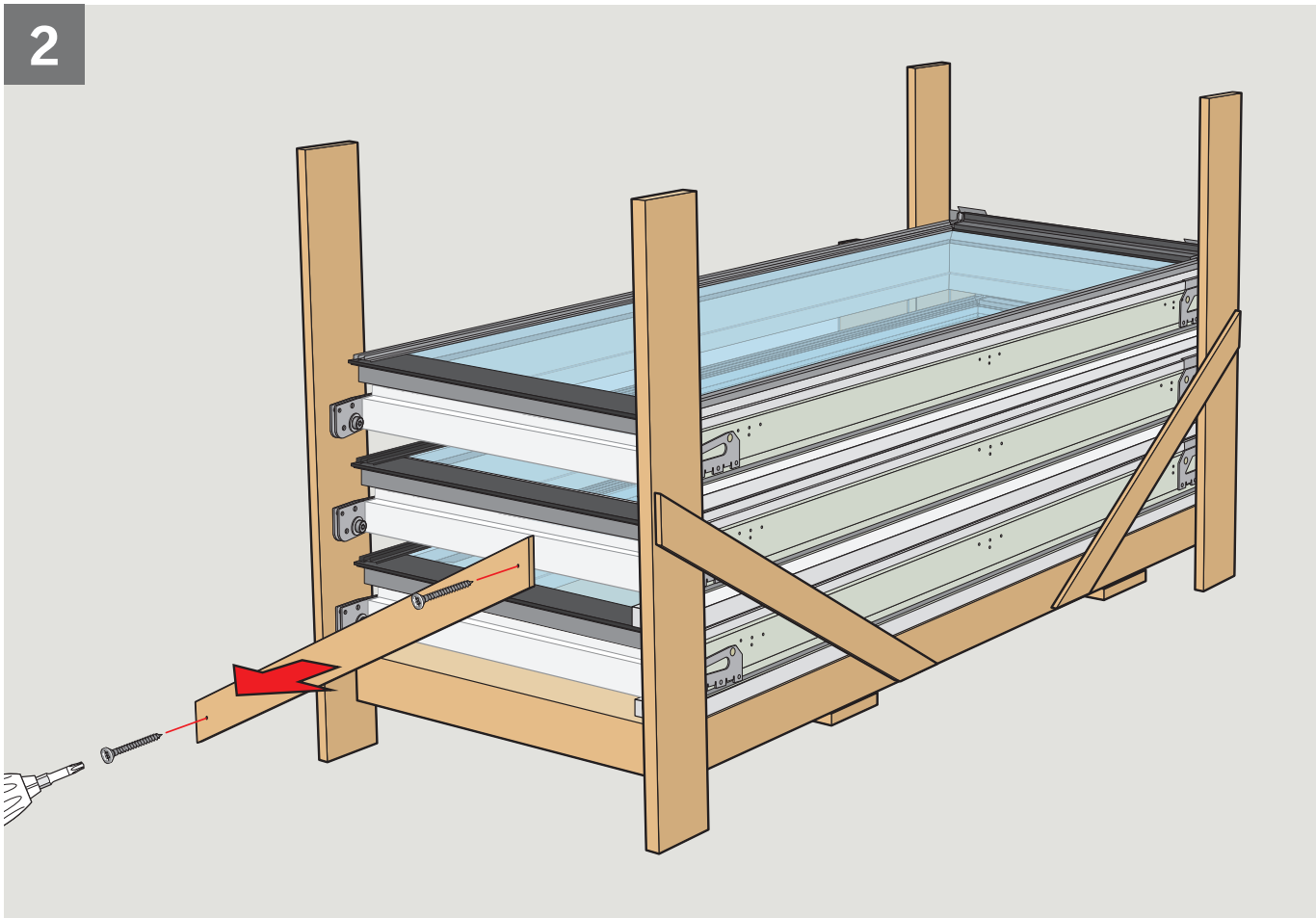

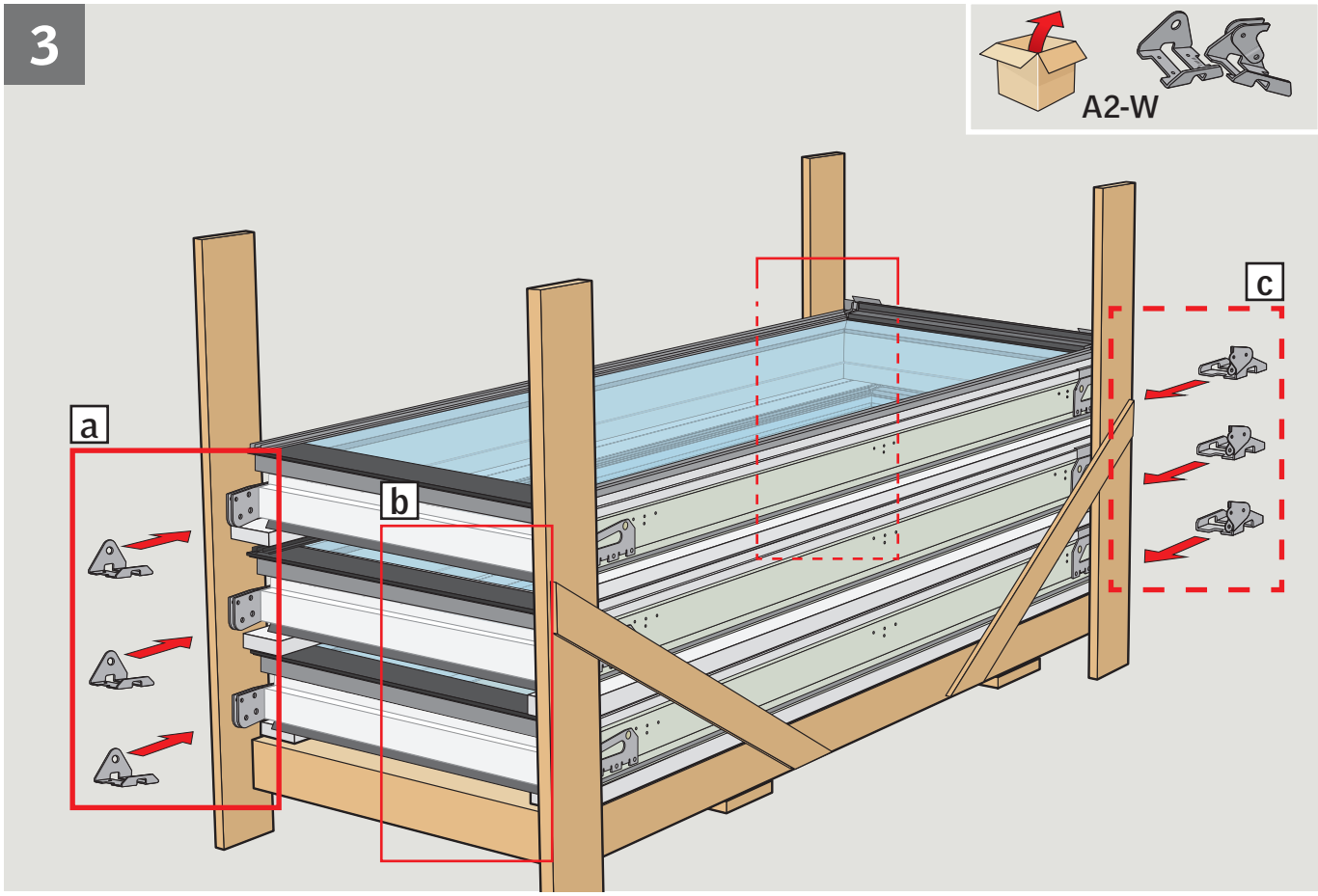
3
A2-W
a
b
c

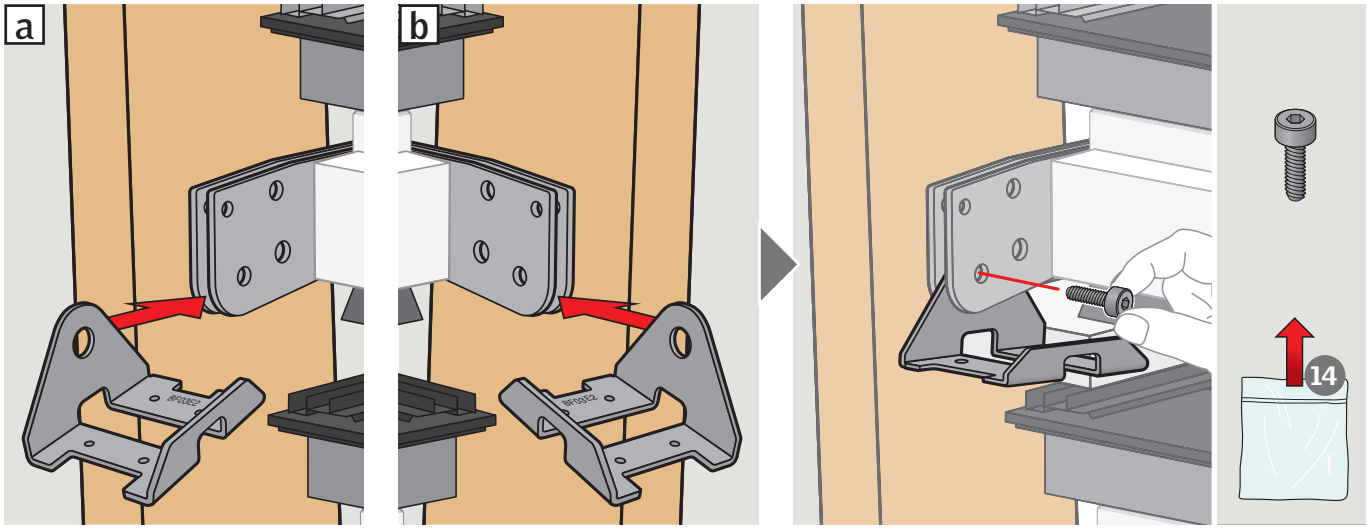
a
b
14

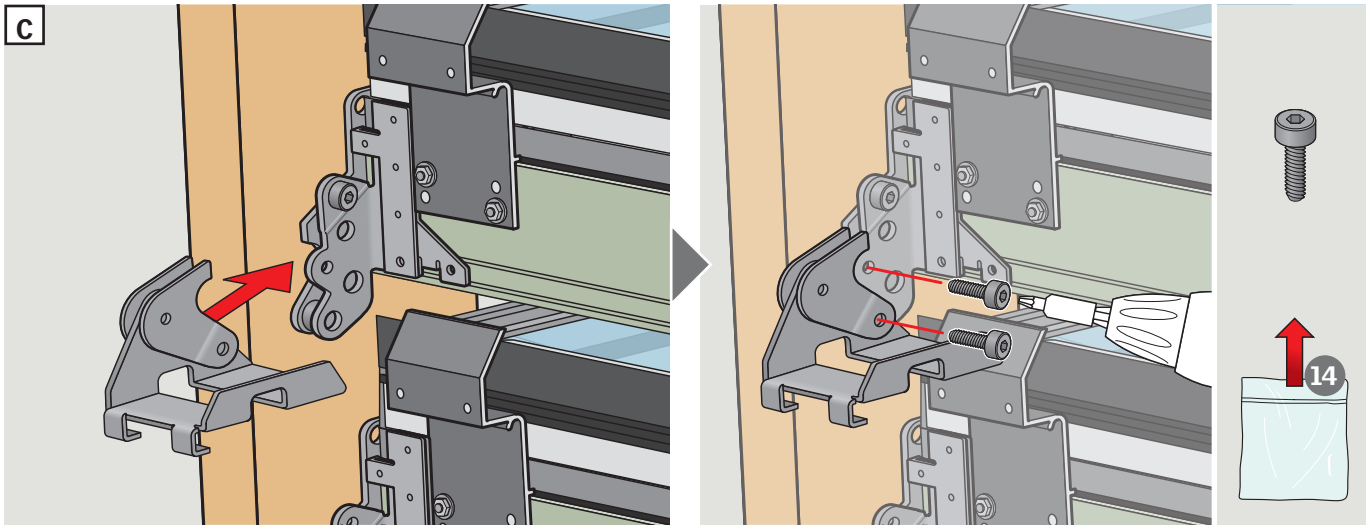
c
14

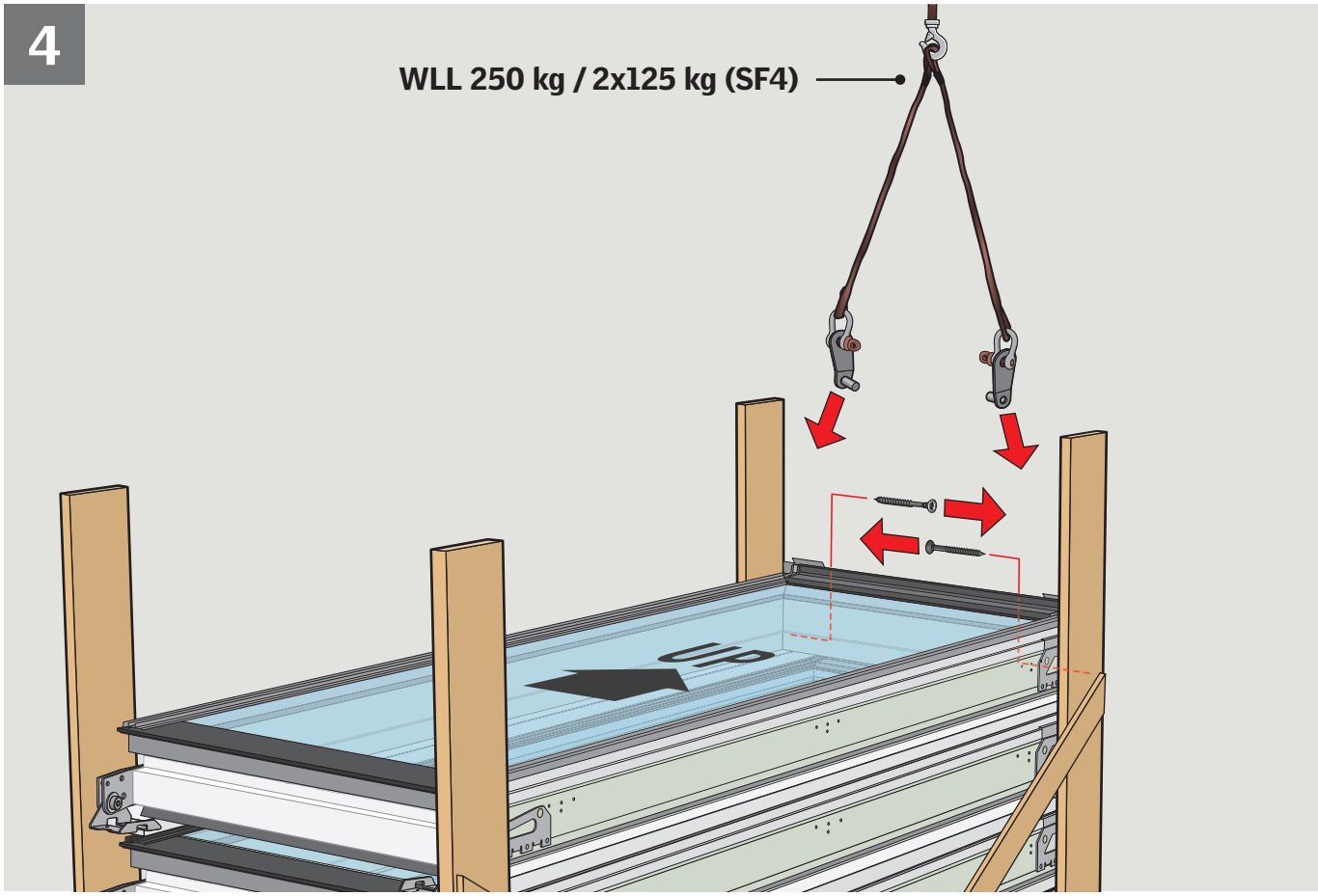
4
WLL 250 kg / 2x125 kg (SF4)
UP

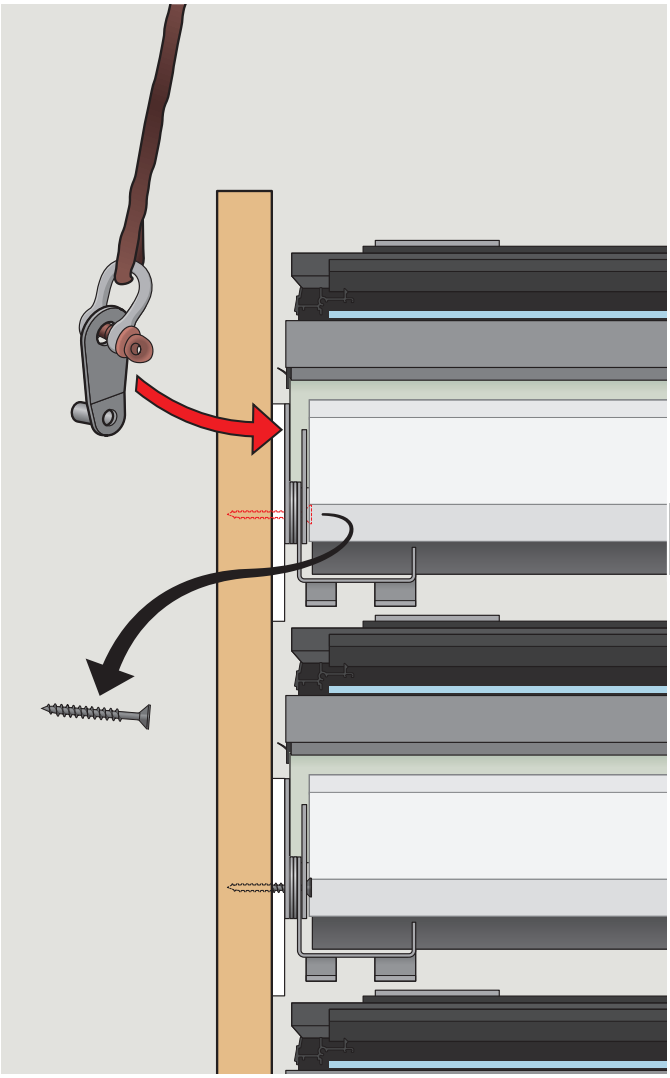

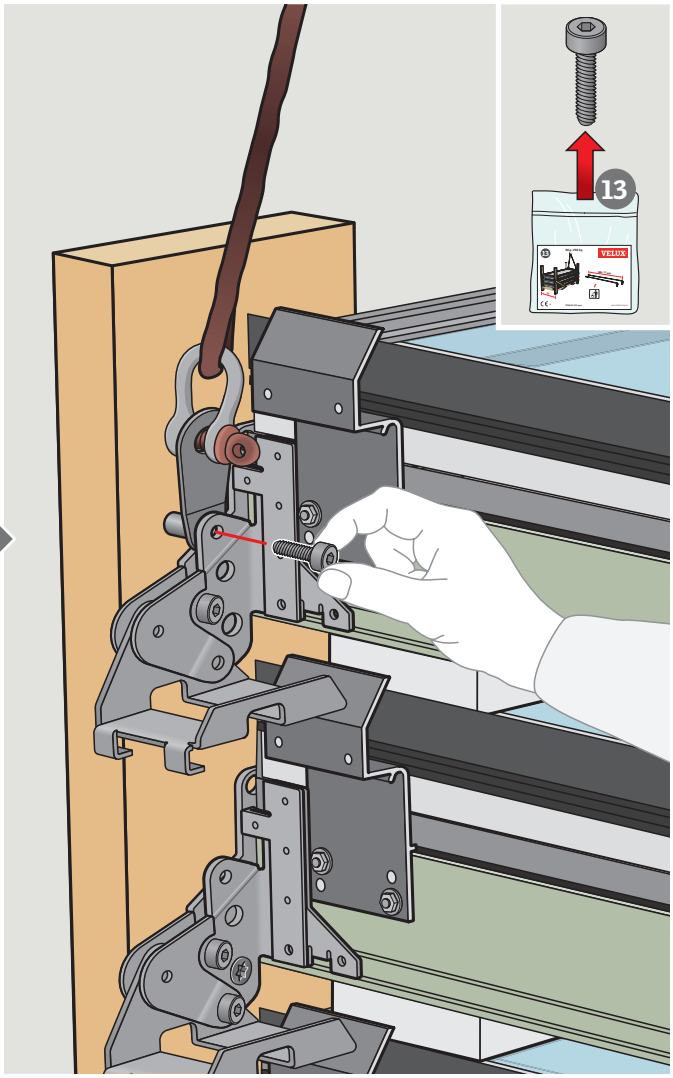
13
VELUX

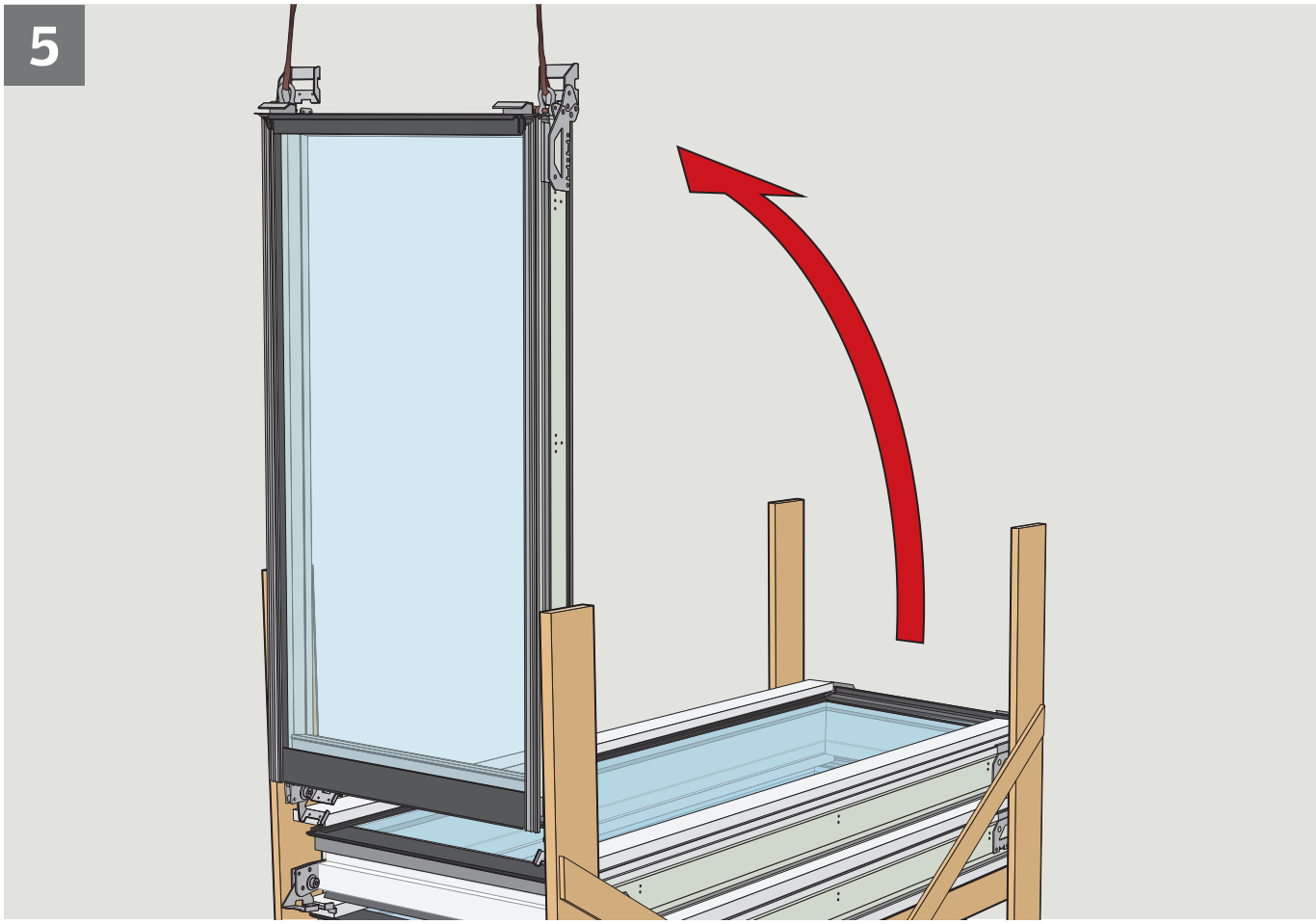
5

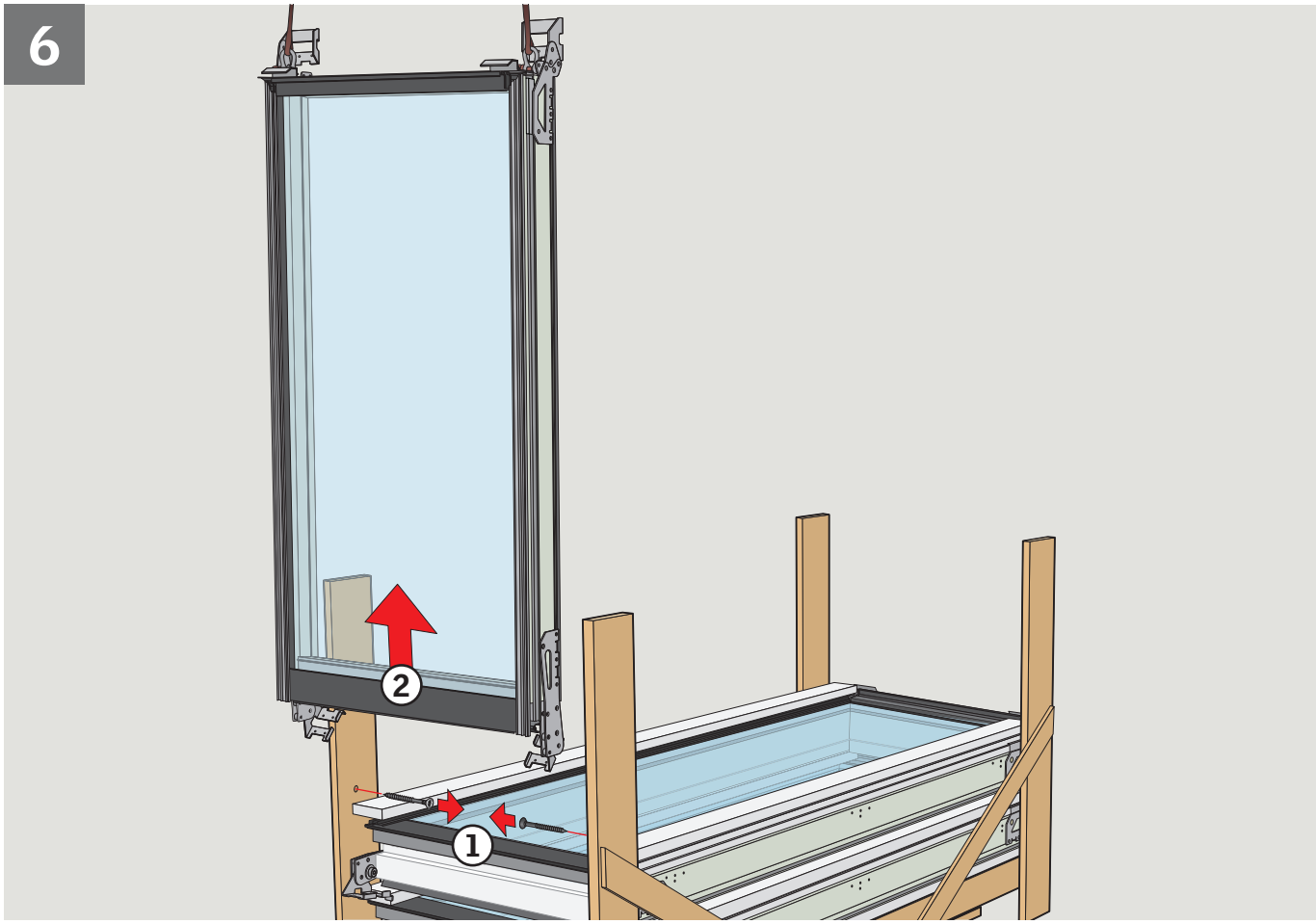
6
2
1

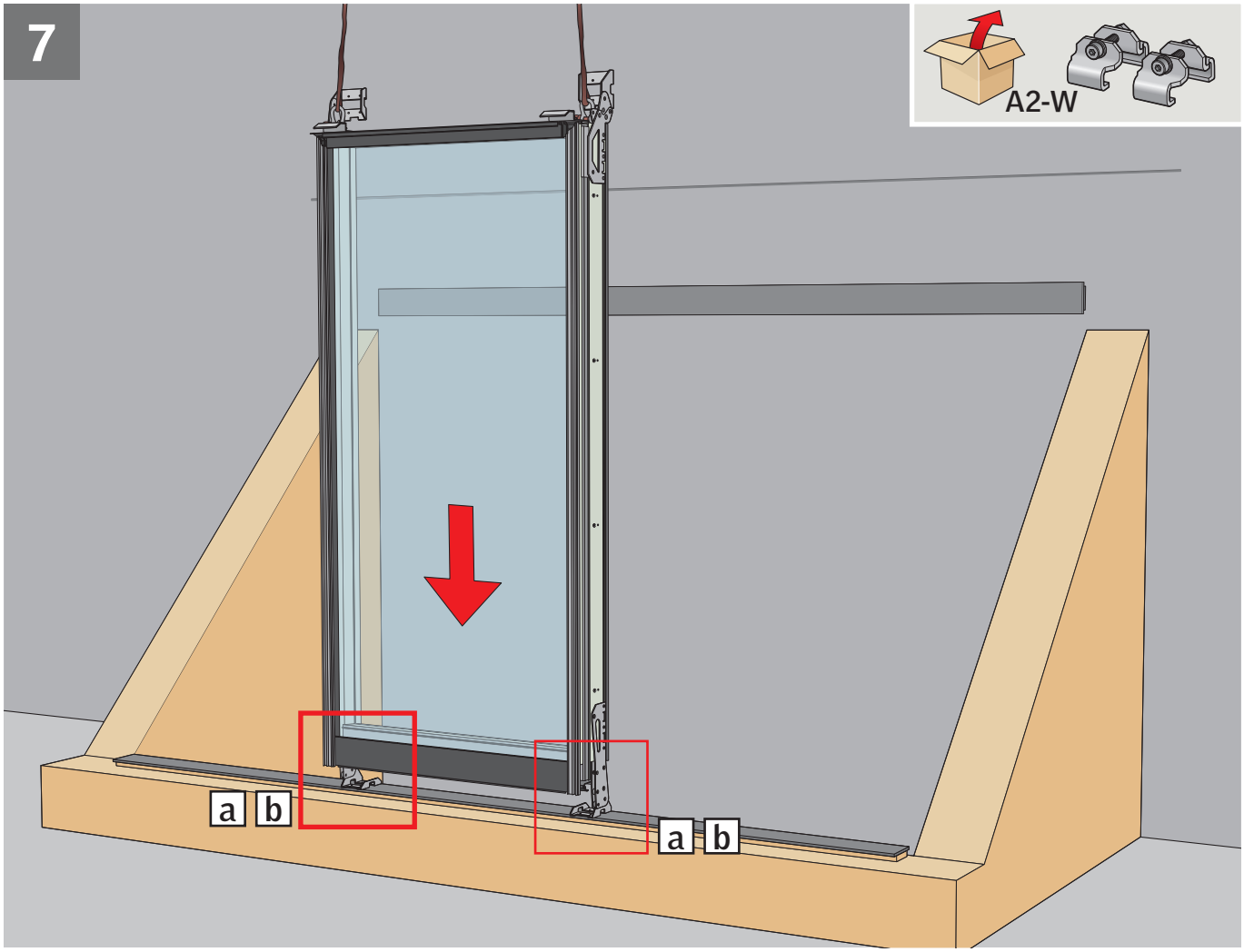
7
A2-W
a
b
a
b

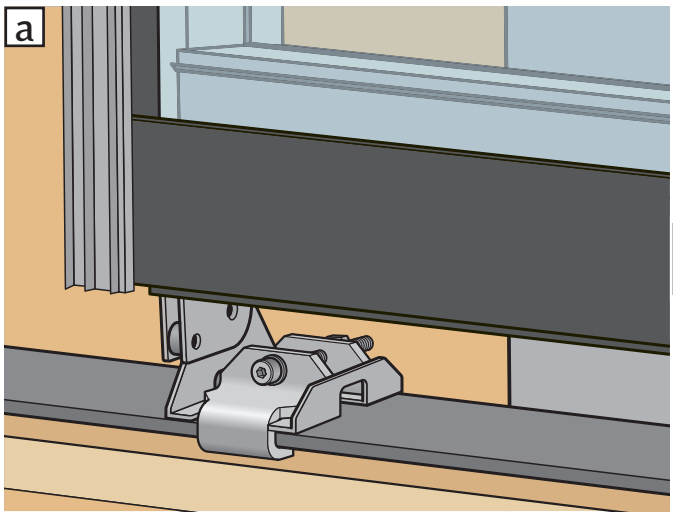
a

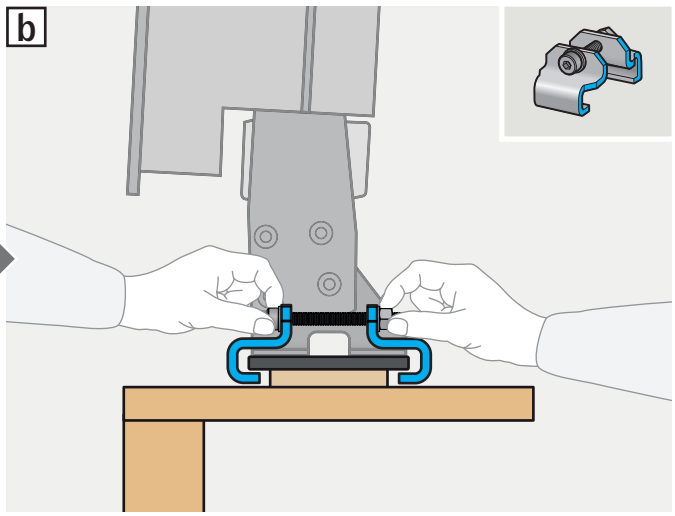
b

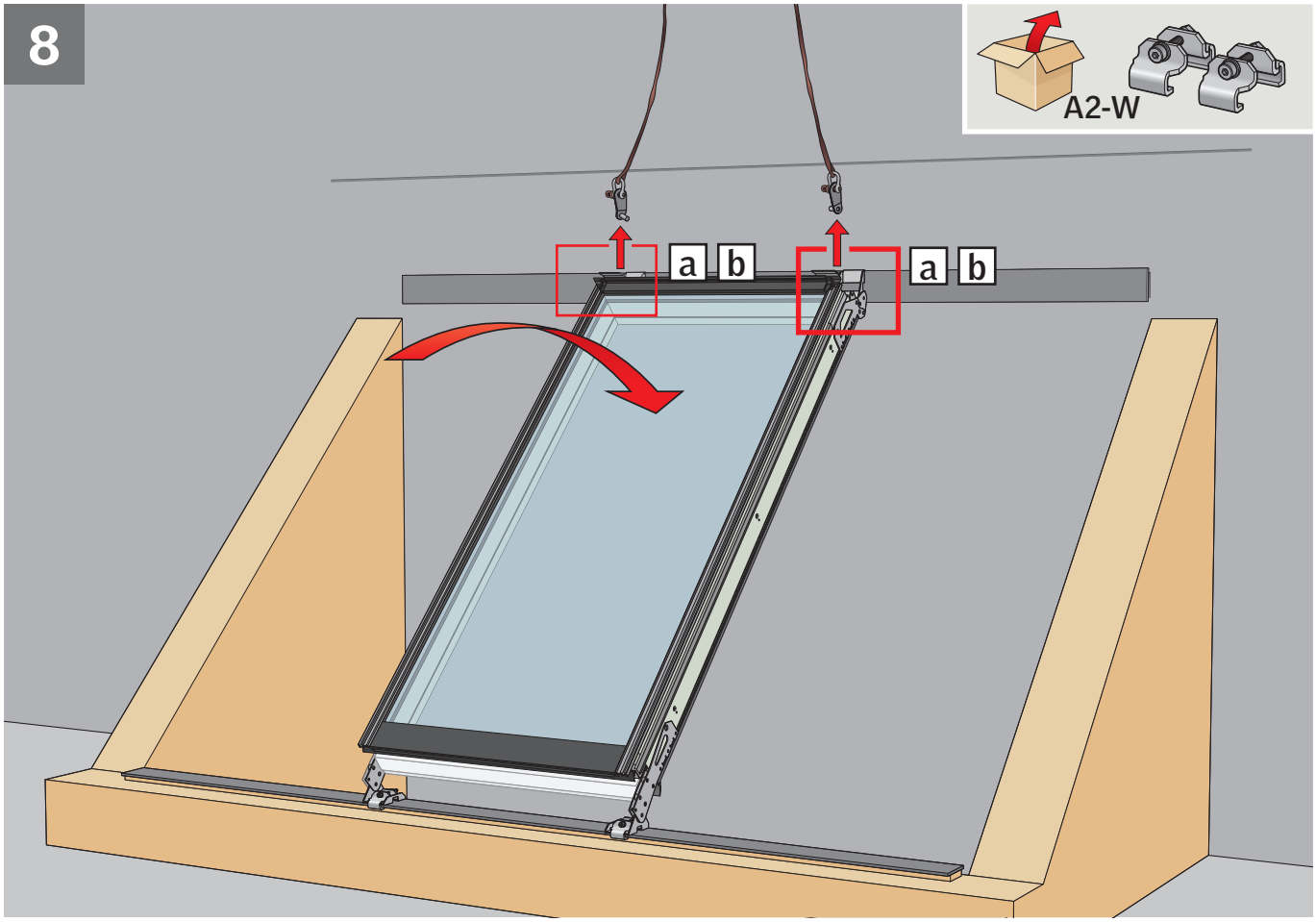
8
A2-W
a
b
a
b

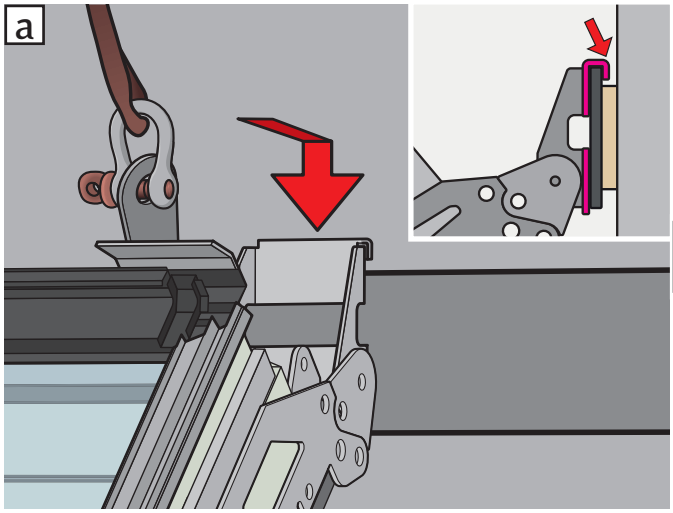
a

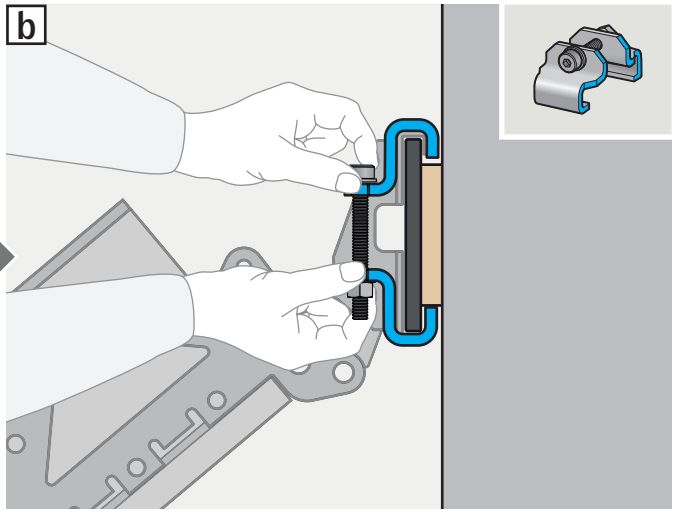
b

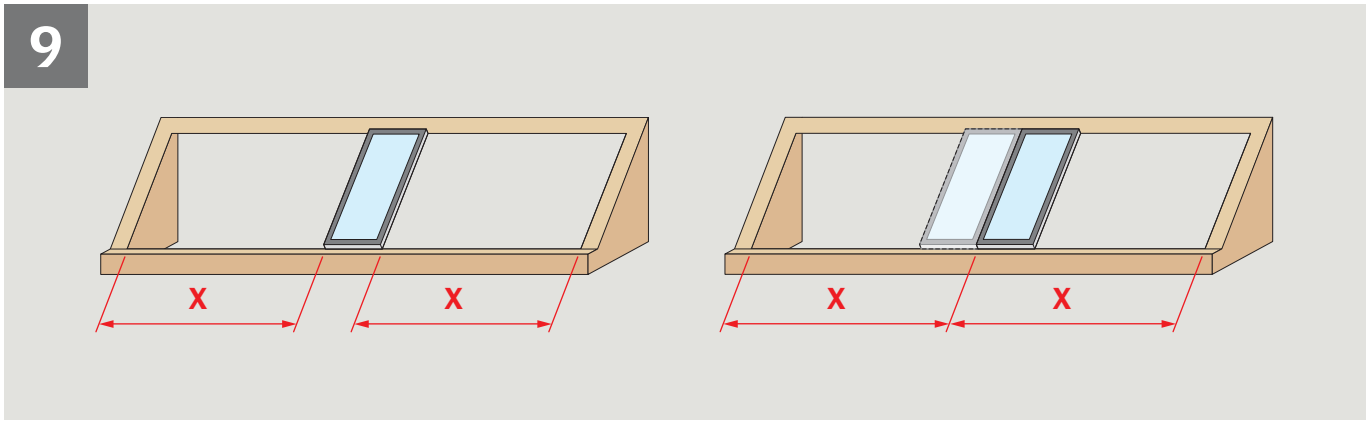
9
X
X
X
X

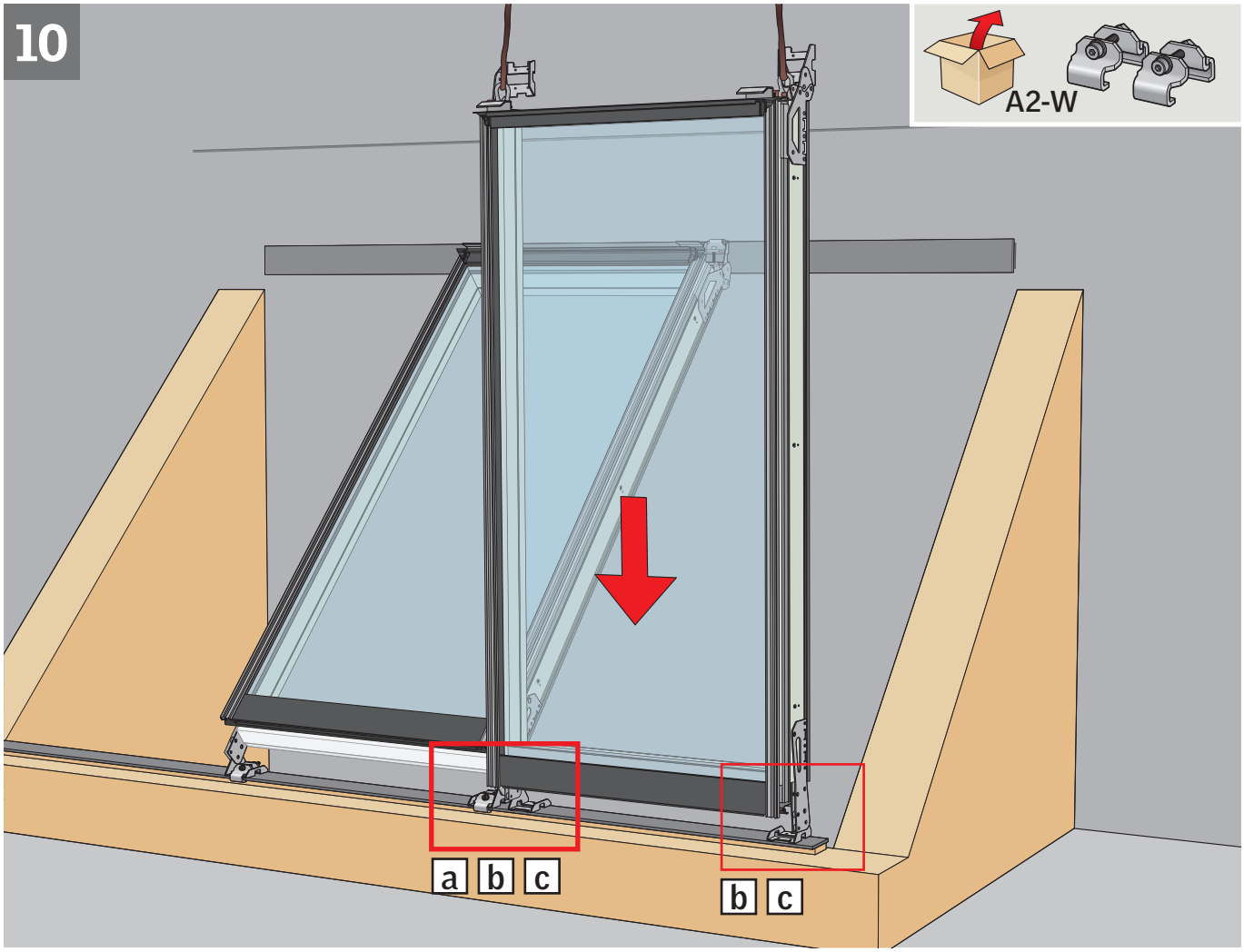
10
A2-W
a
b
c
b
c

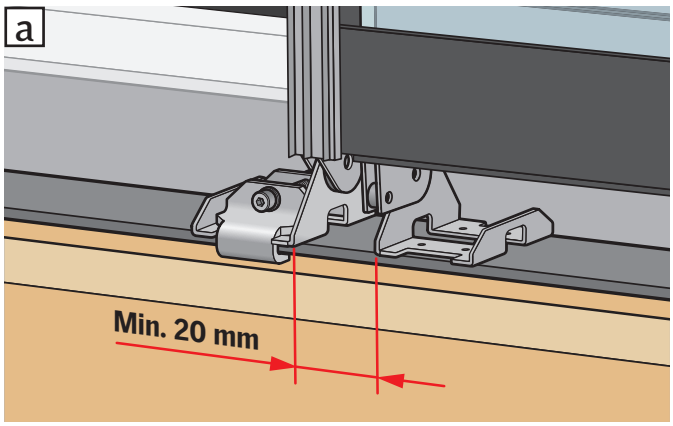
a
Min. 20 mm

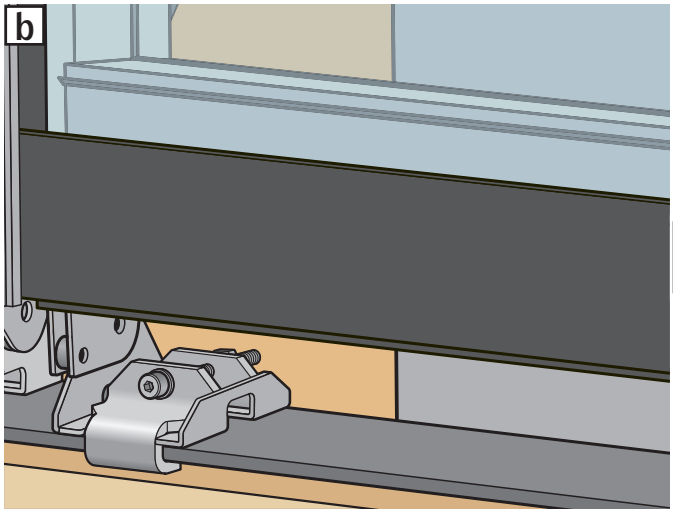
b

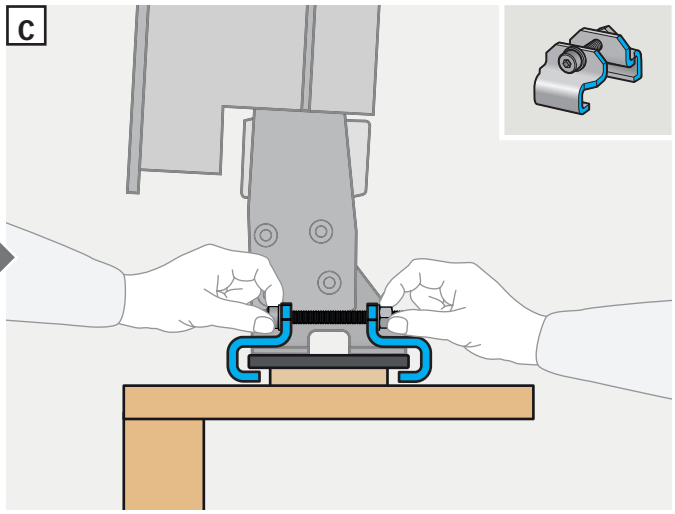
c

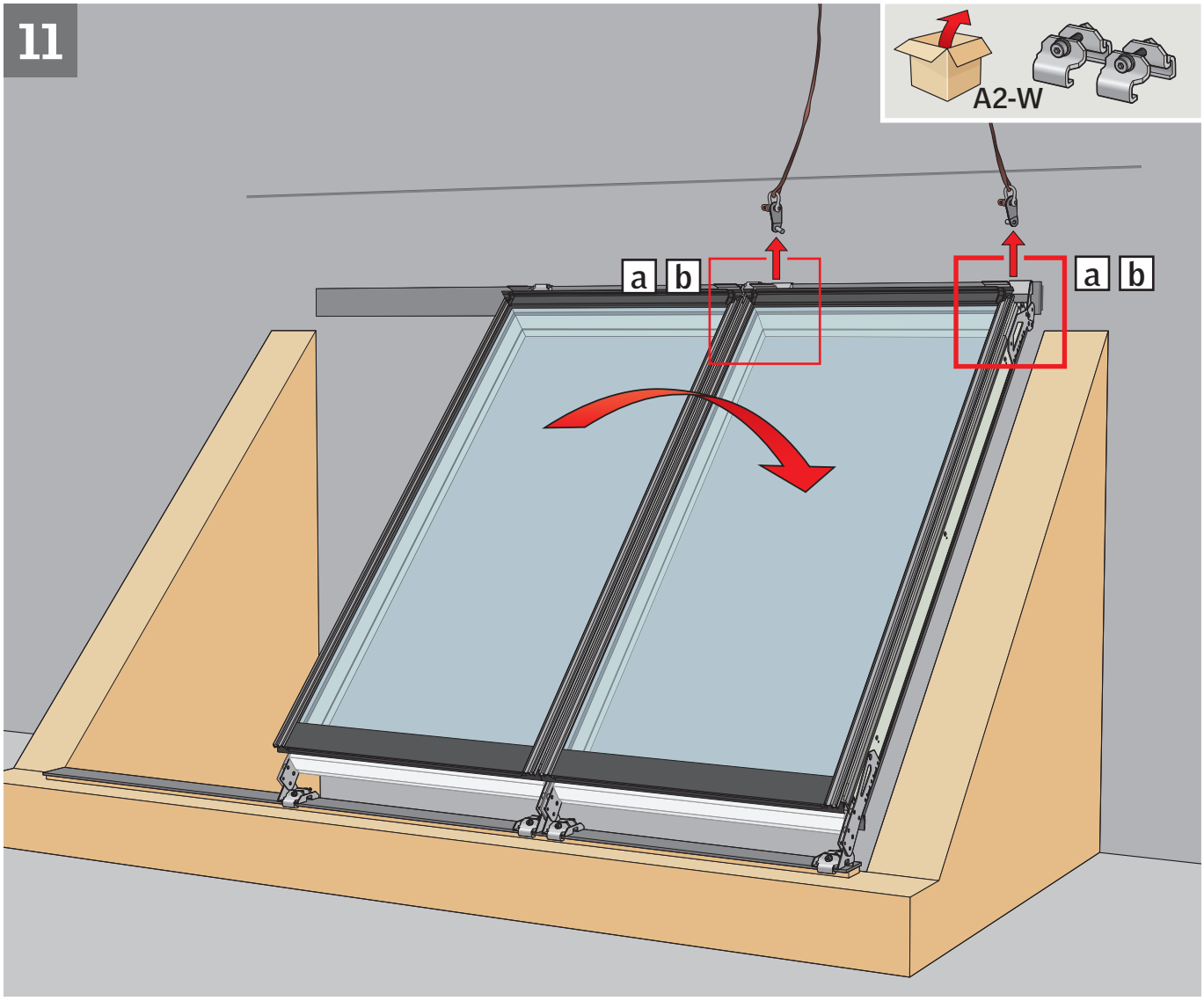
11
A2-W
a
b
a
b

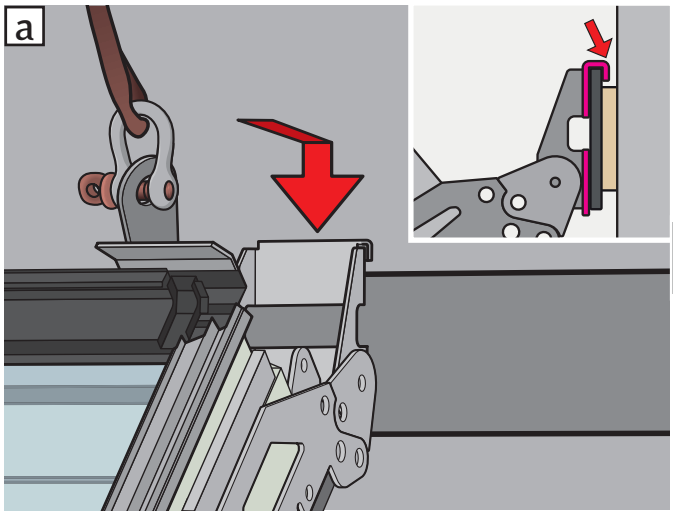
a

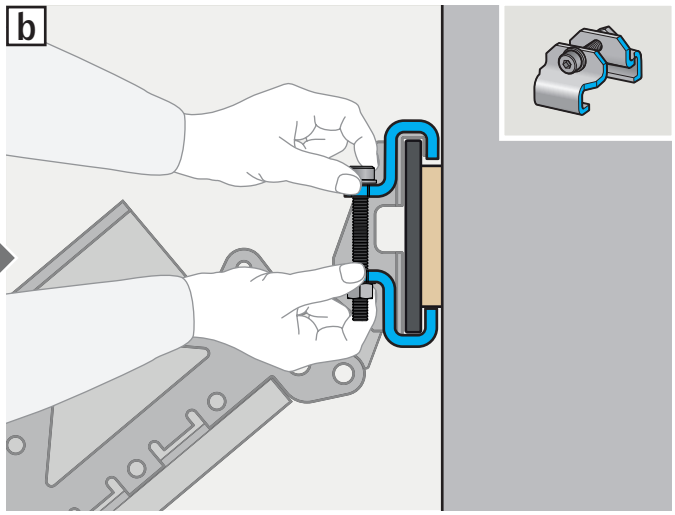
b

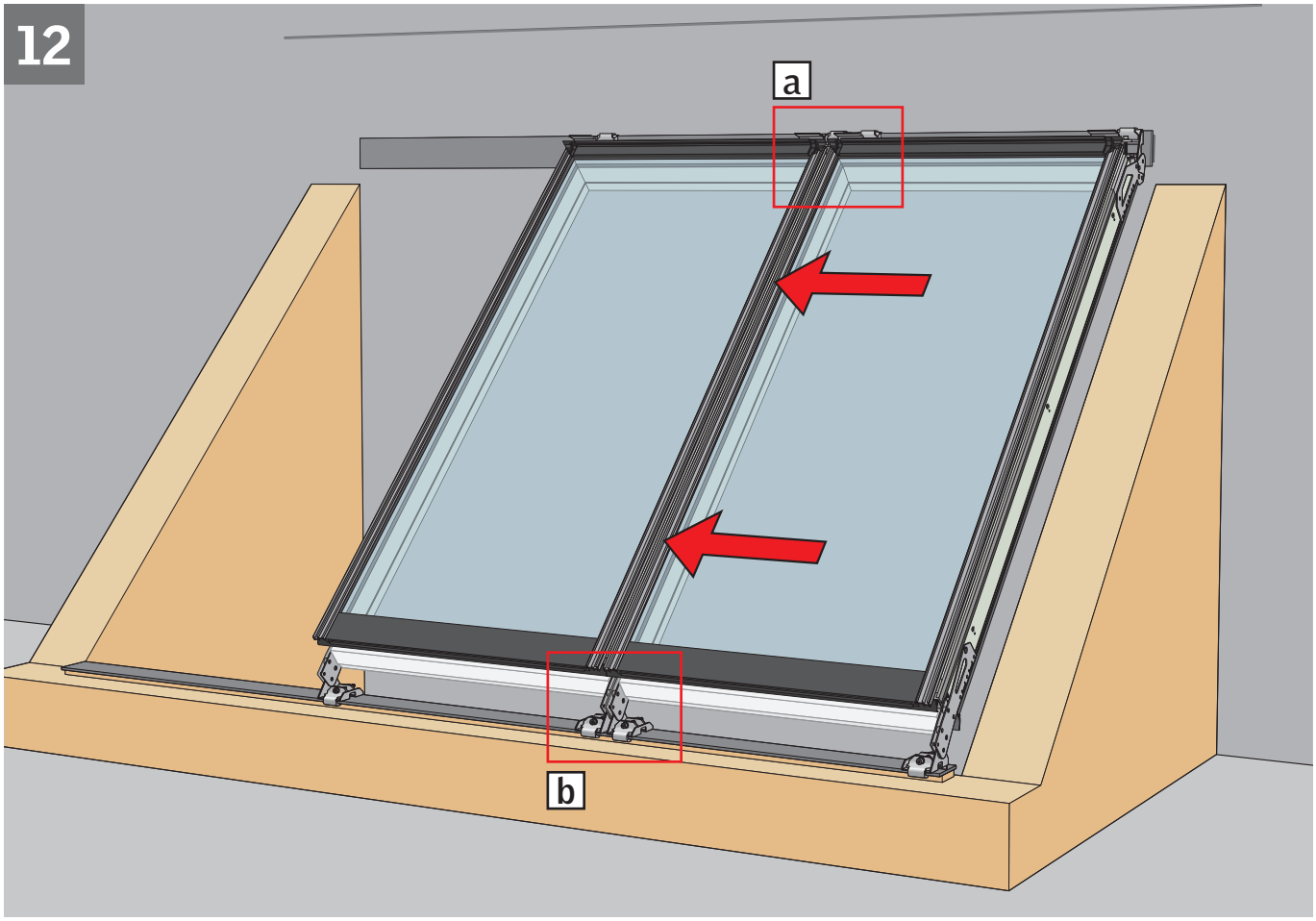
12
a
b

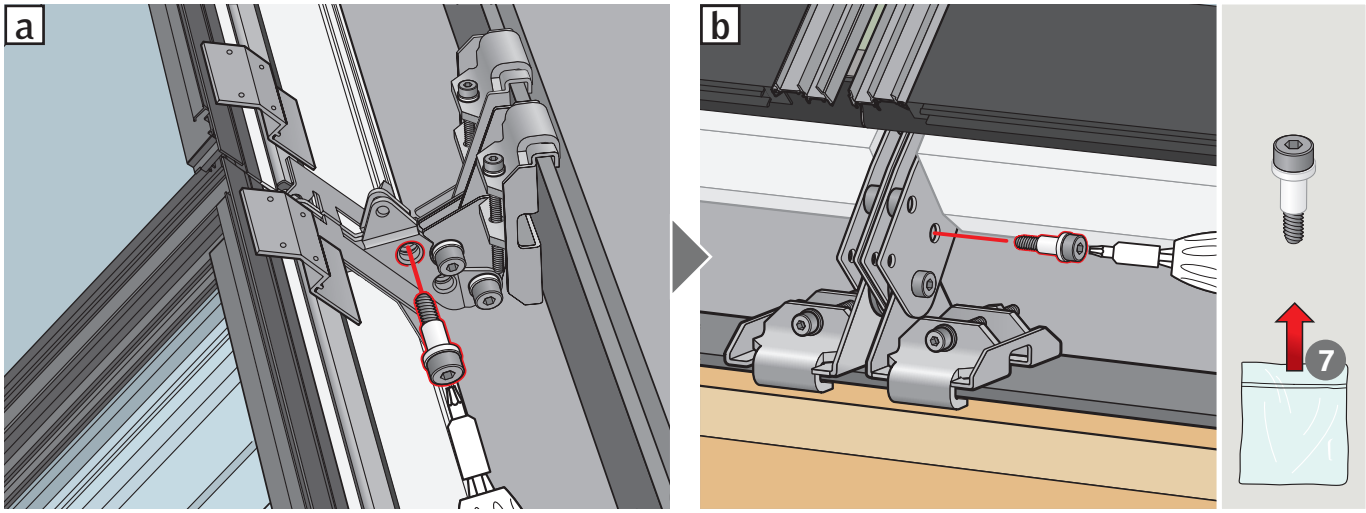
a
b
7

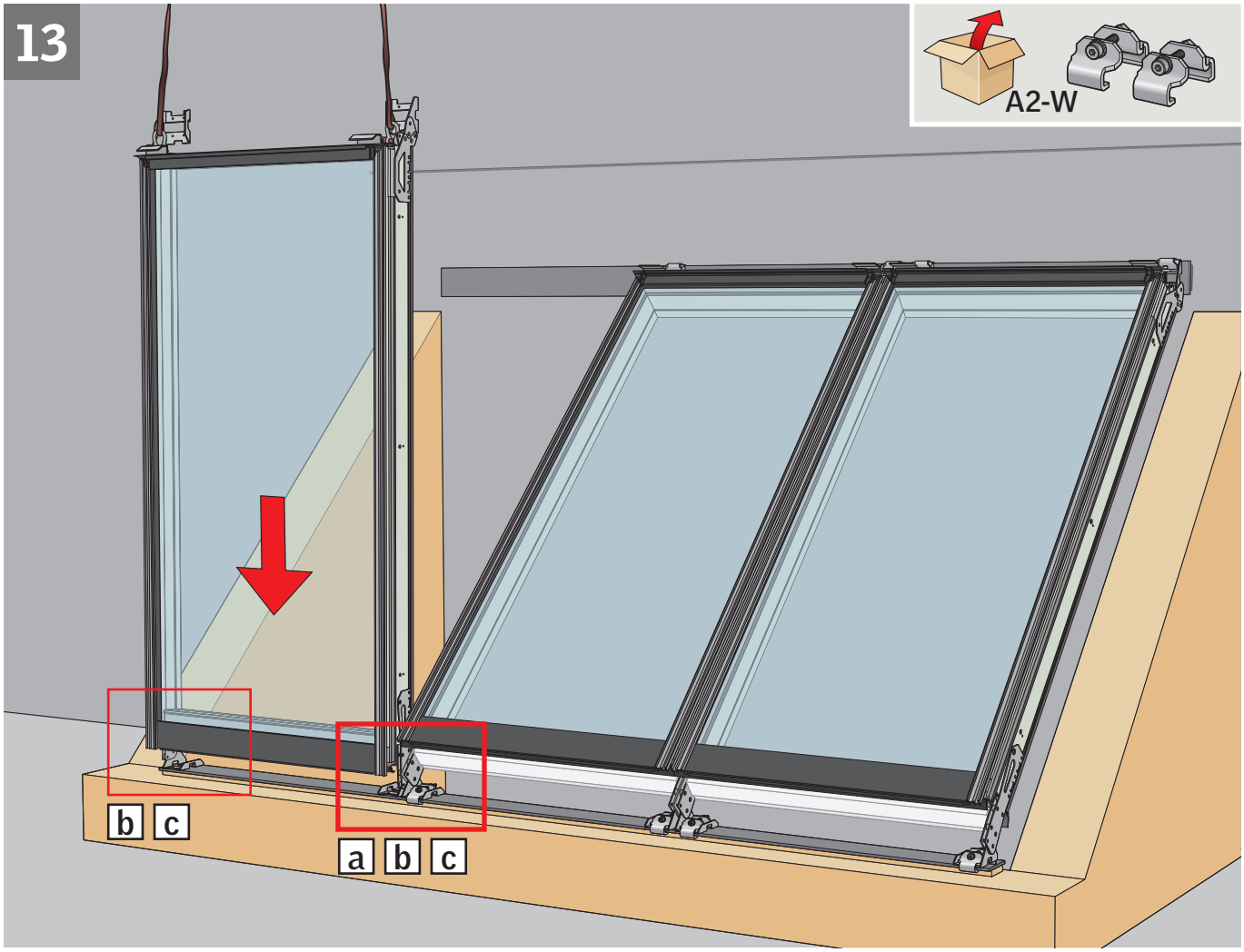
13
A2-W
b
c
a
b
c

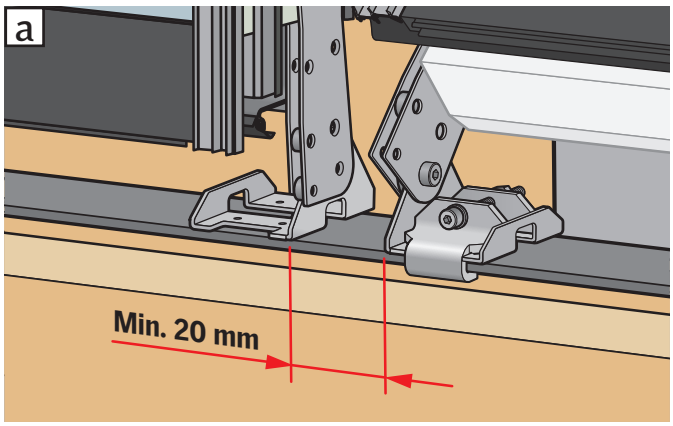
a
Min. 20 mm

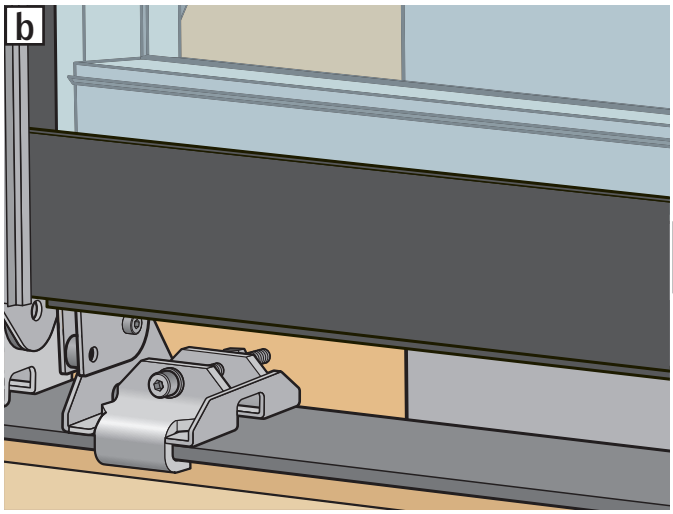
b

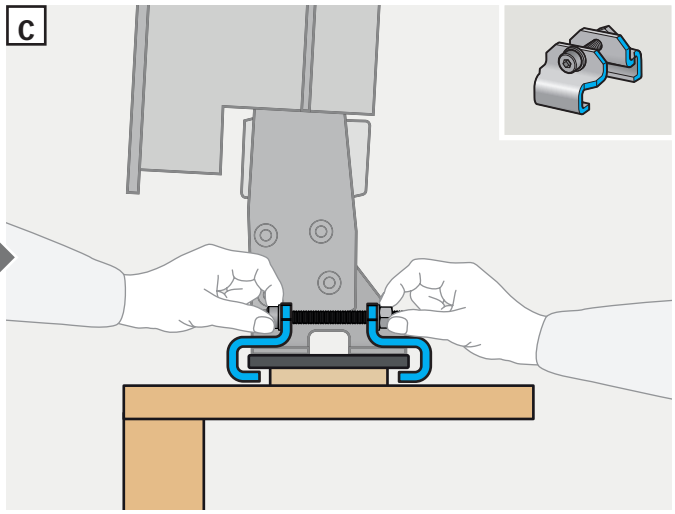
c

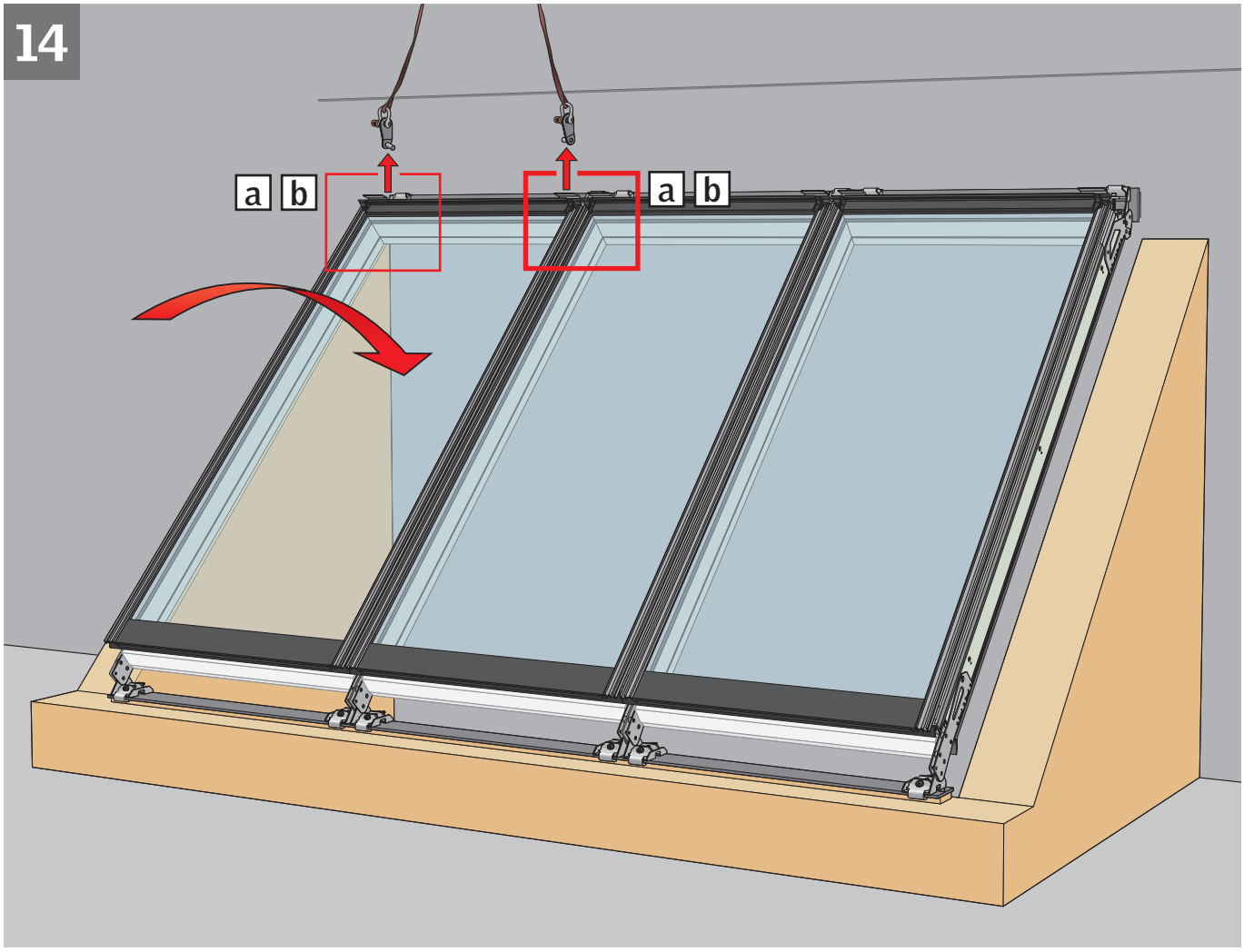
14
a
b
a
b

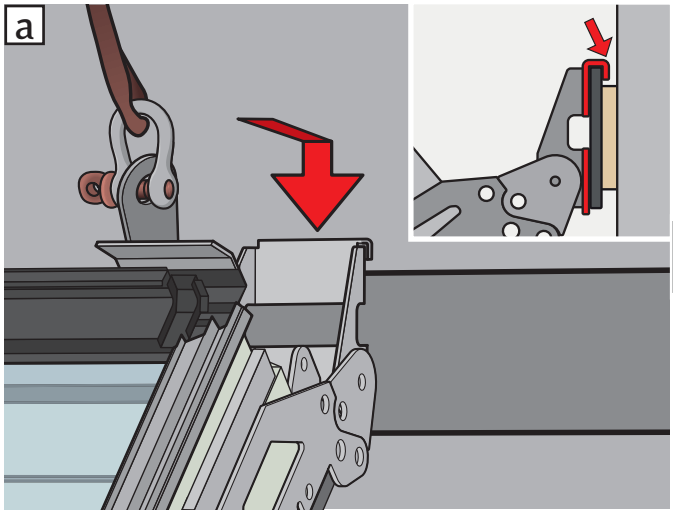
a

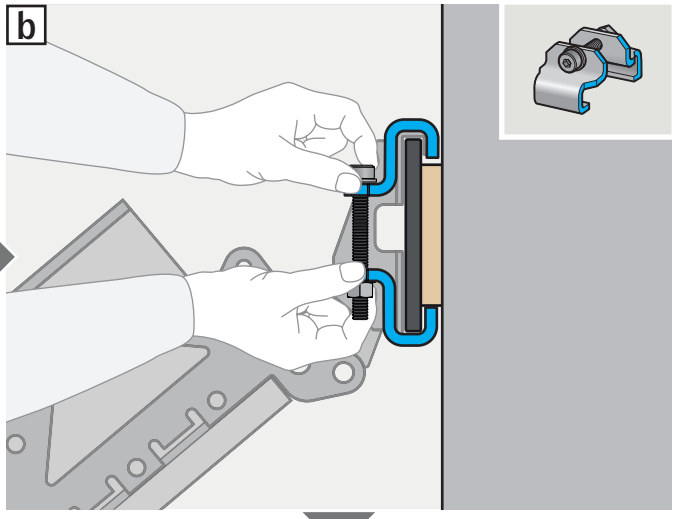
b

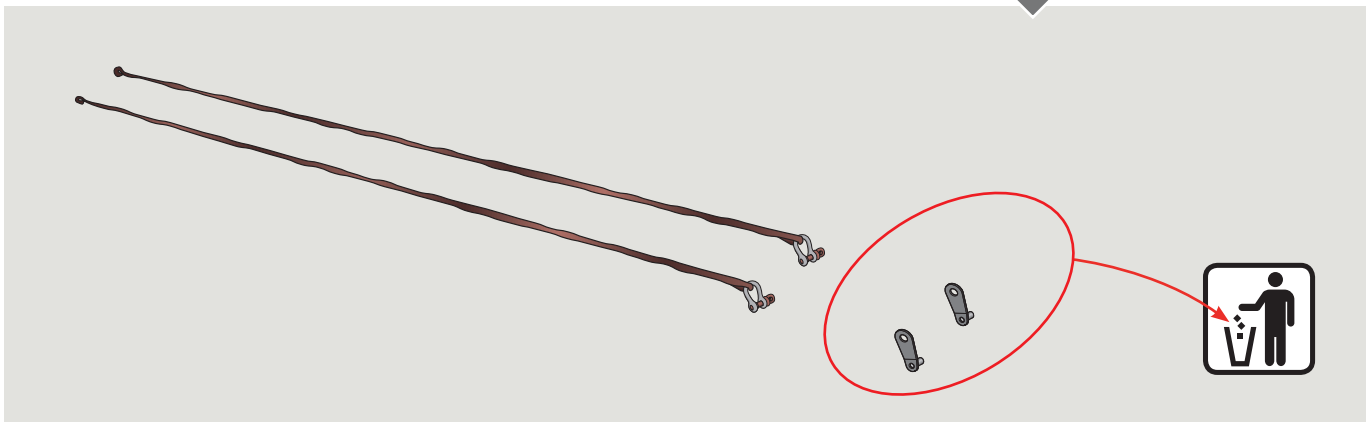

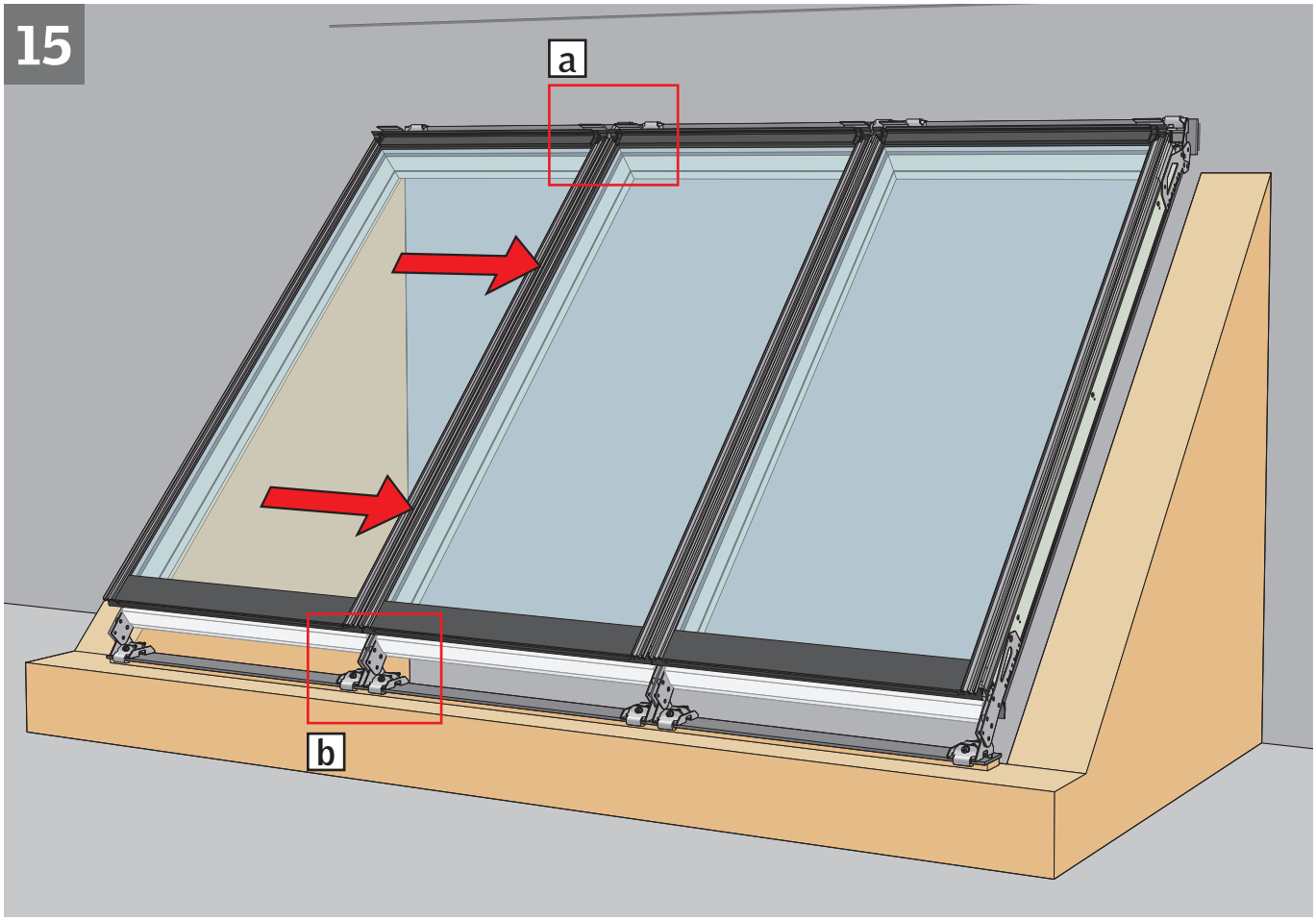
15
a
b

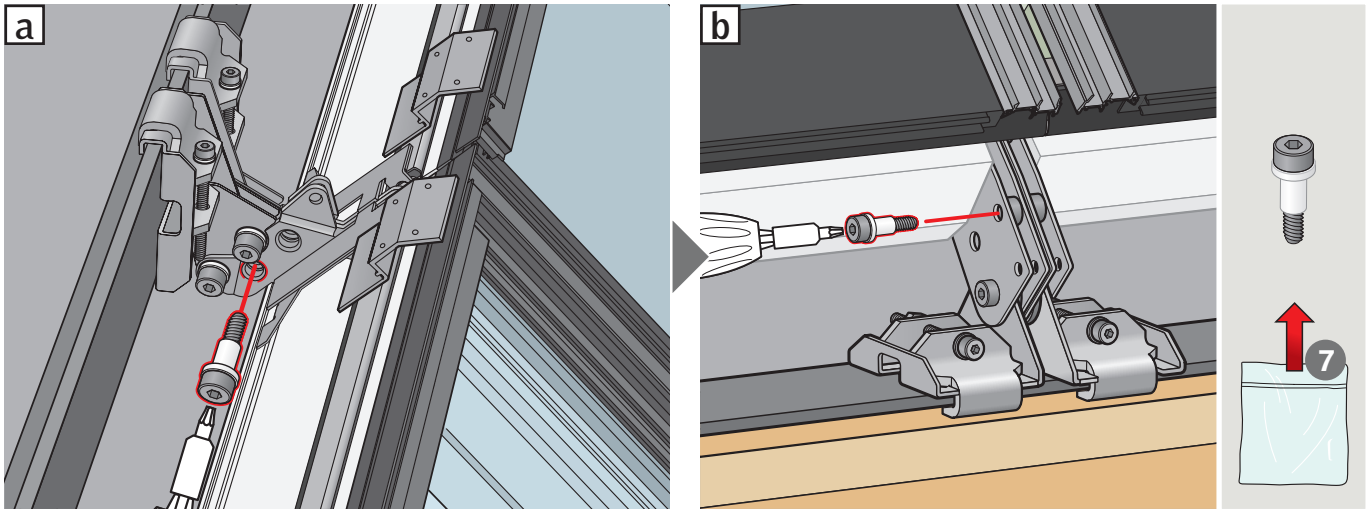
a
b
7

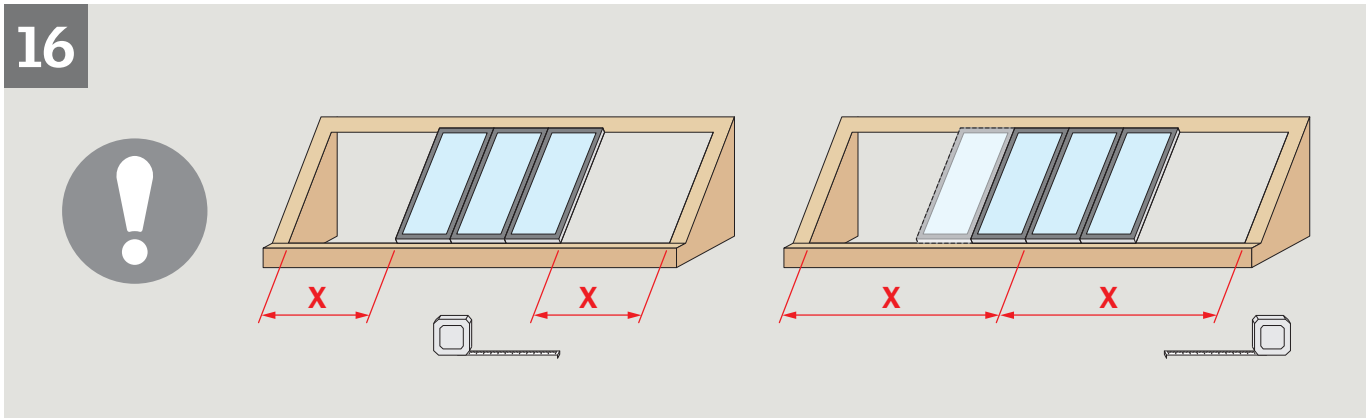
16
X
X
X
X

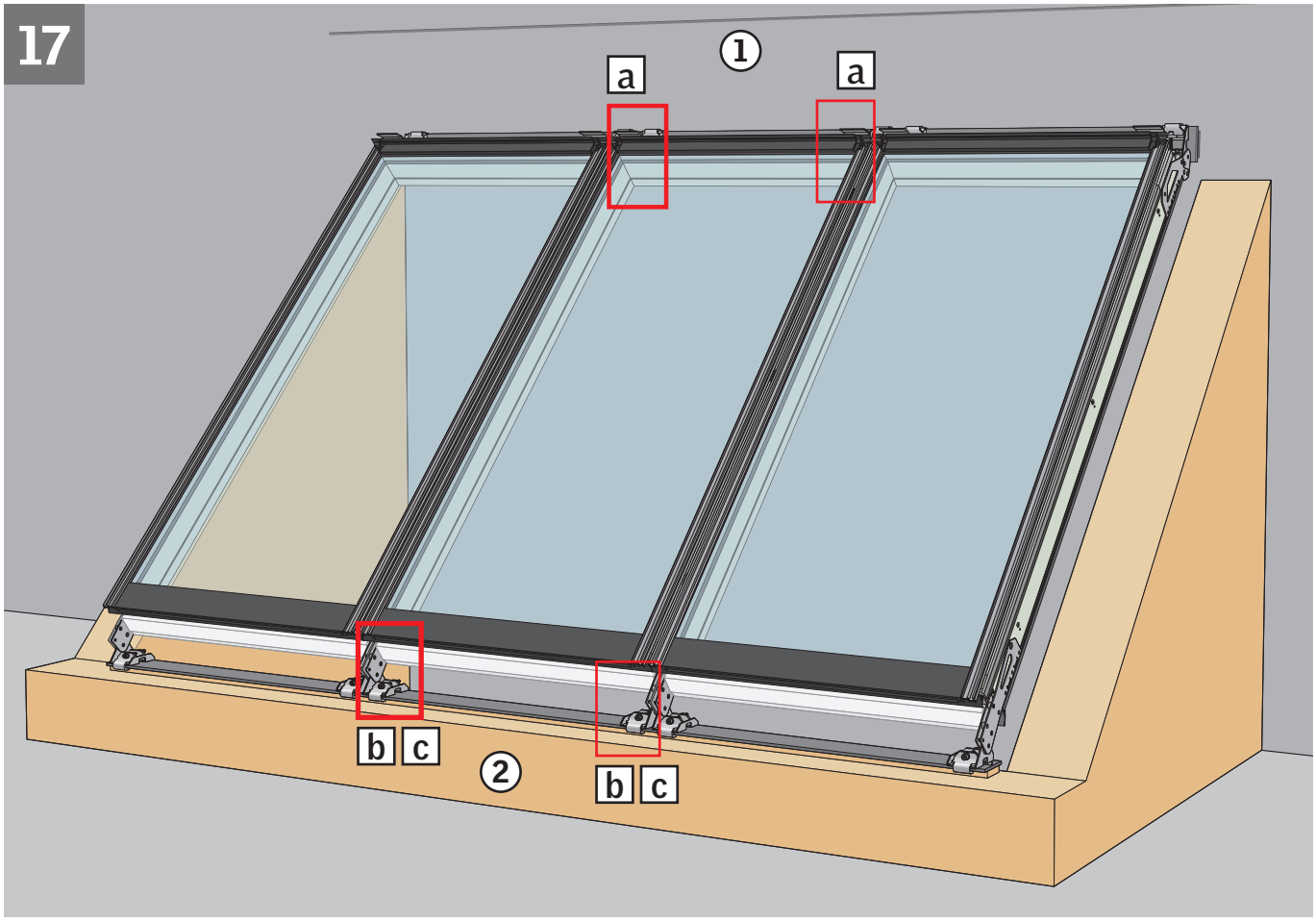
17
1
a
a
b
c
2
b
c

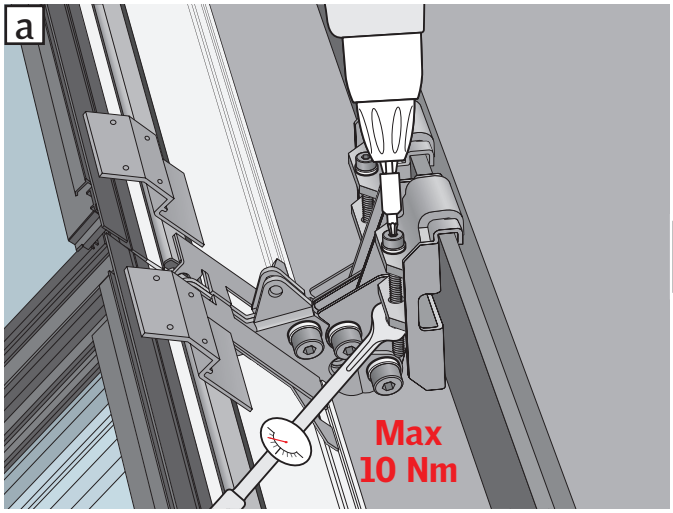
a
Max
10 Nm

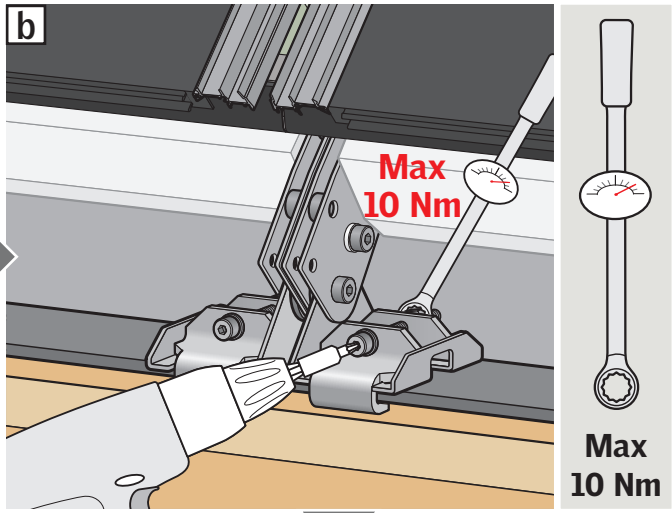
b
Max
10 Nm
Max
10 Nm

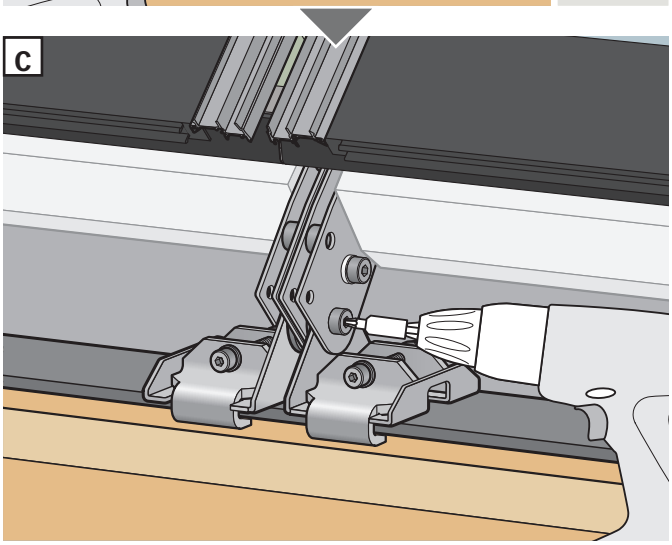
c

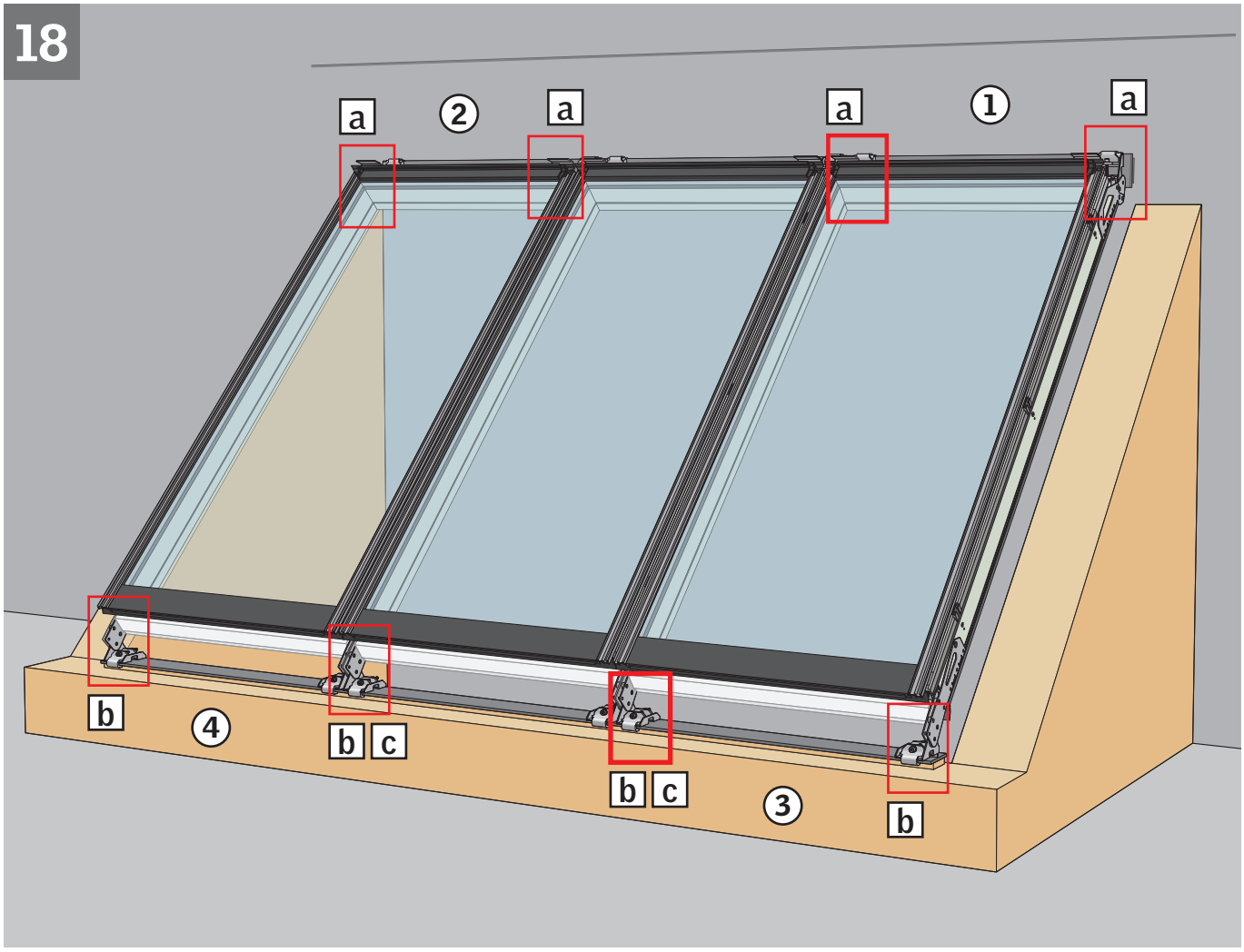
18
a
2
a
a
1
a
b
4
b c
b c
3
b

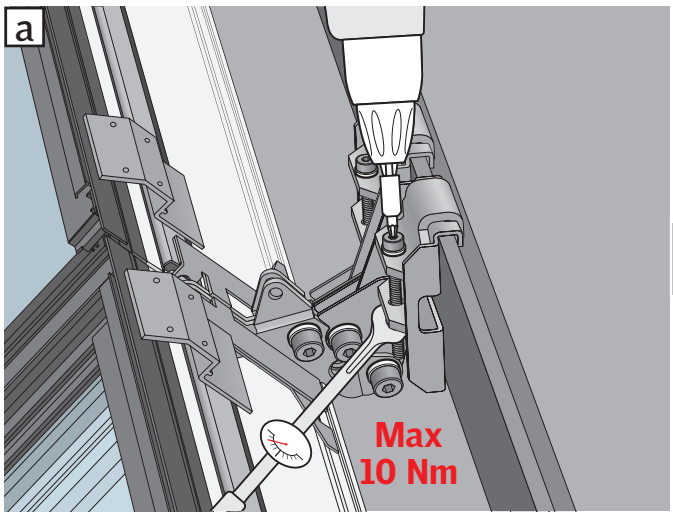
a
Max
10 Nm

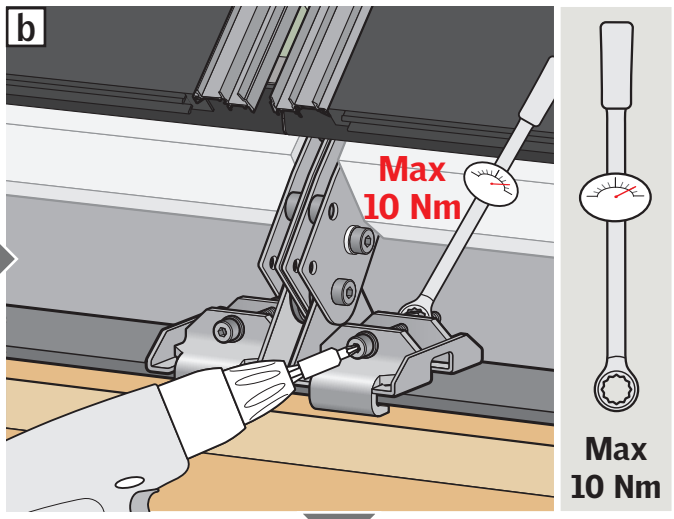
b
Max
10 Nm
Max
10 Nm

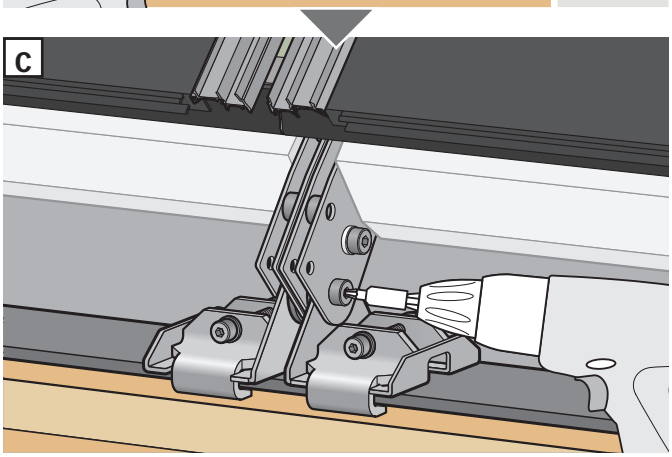
c

19

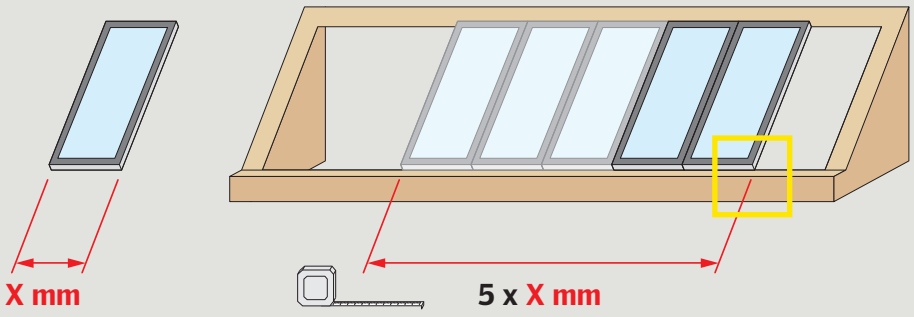

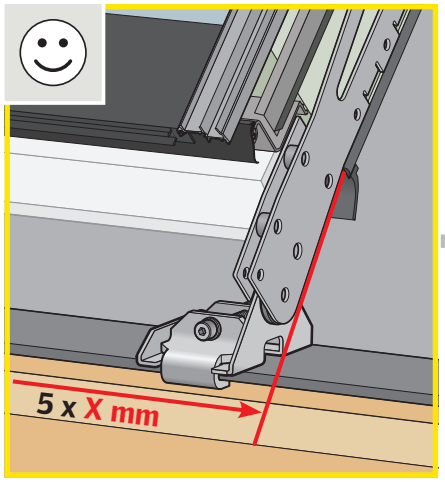

20

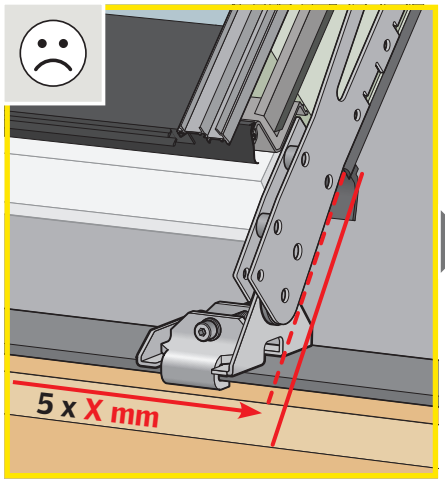

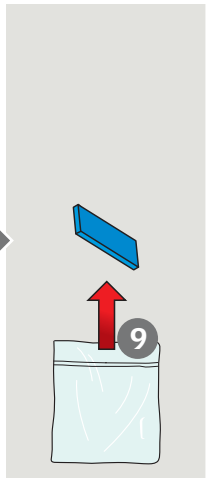

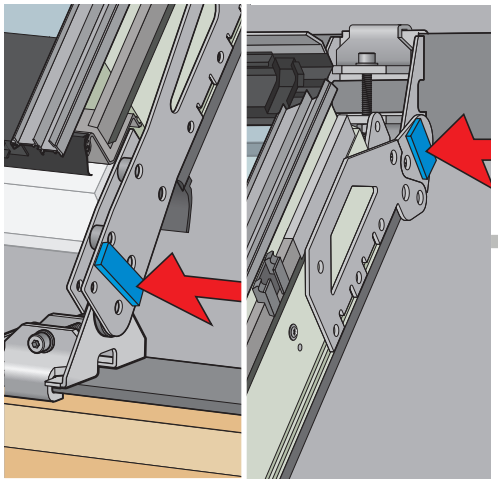

20

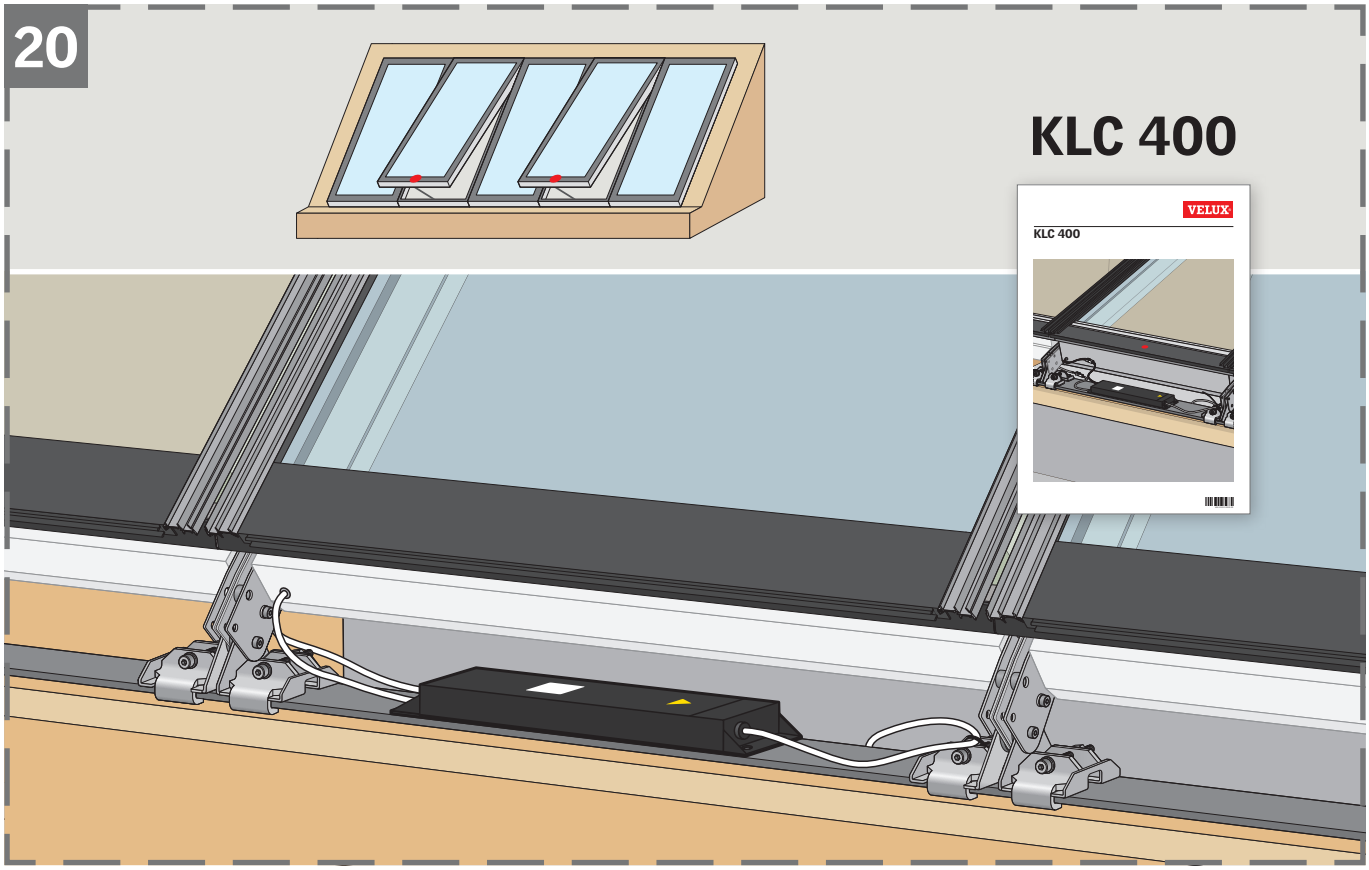
20
KLC 400
VELUX
KLC 400

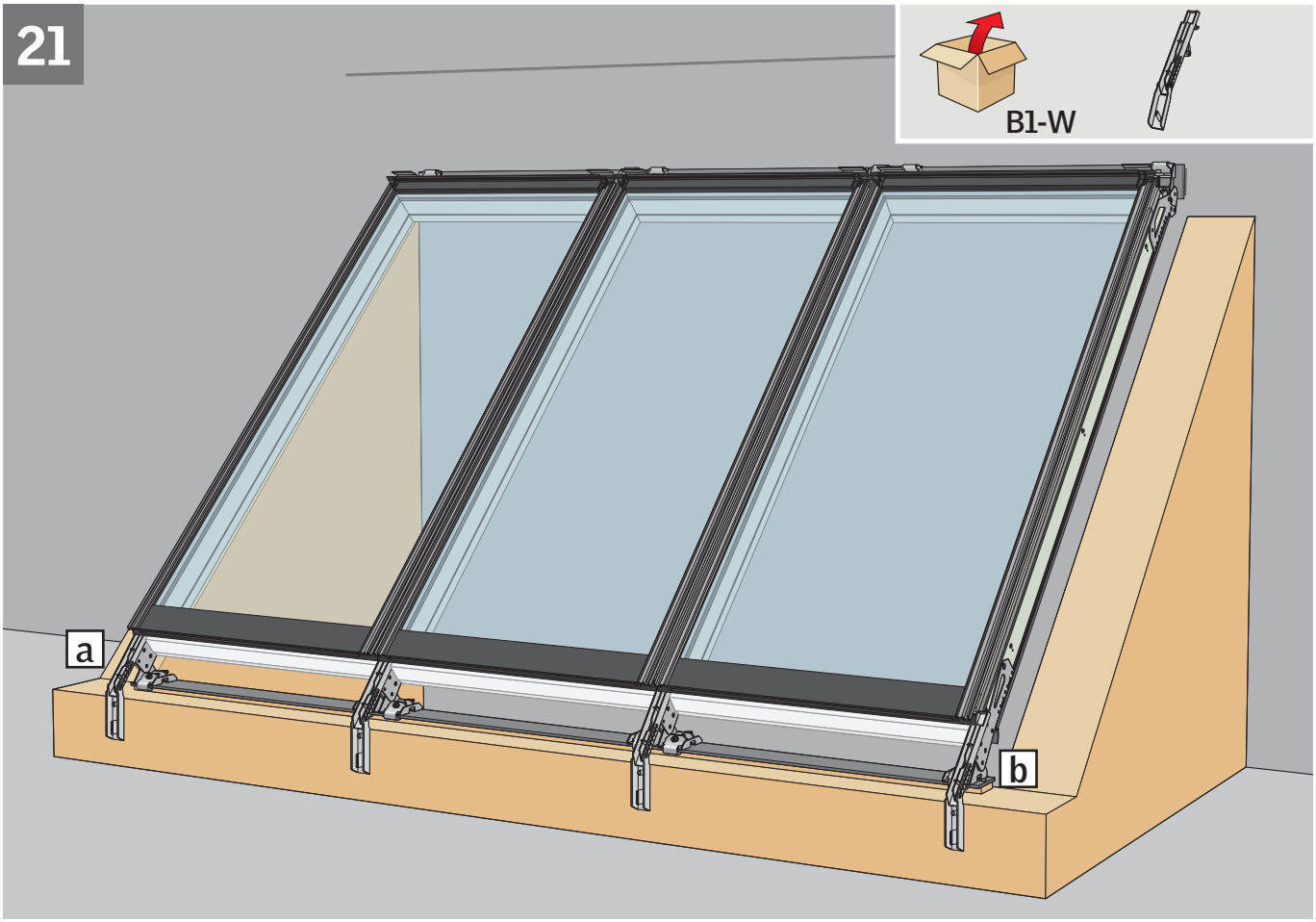
21
B1-W
a
b

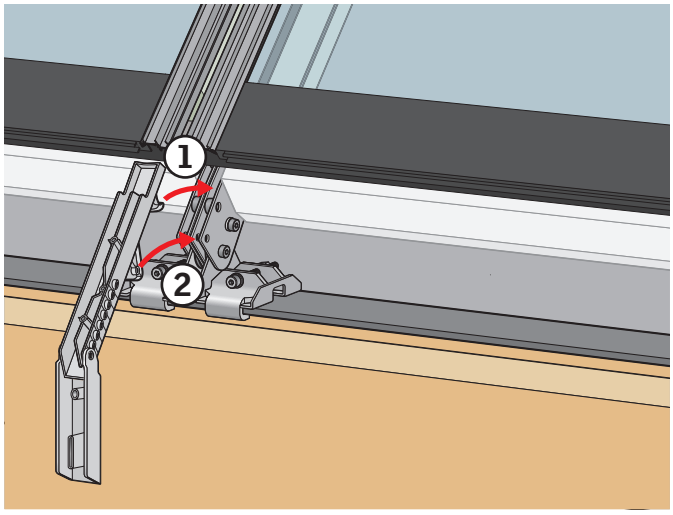
1
2

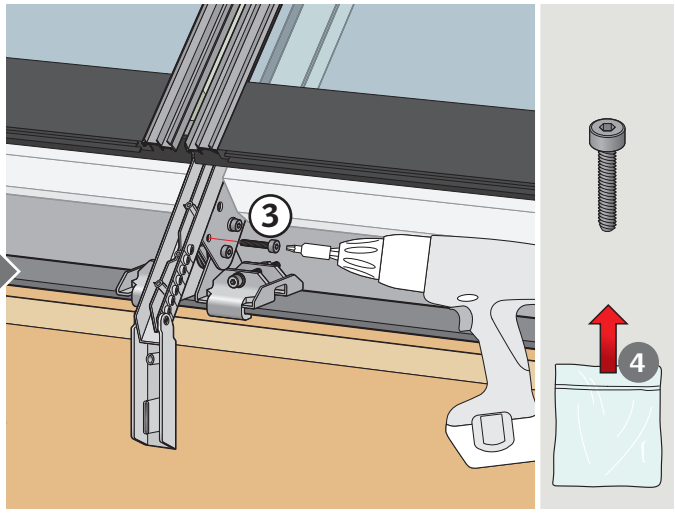
3
4

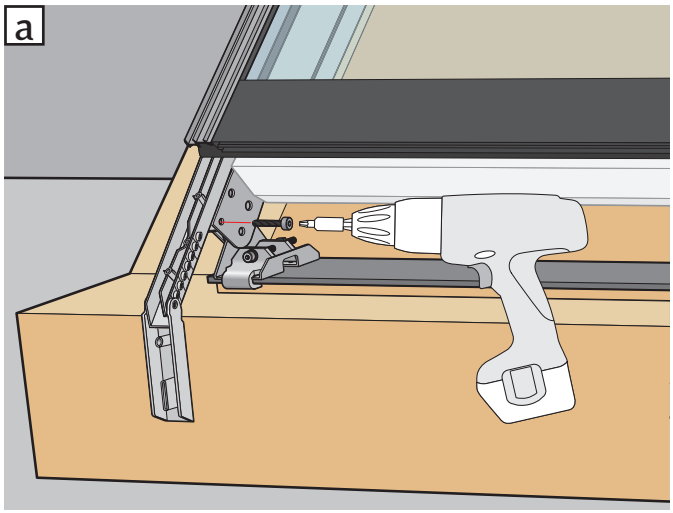
a

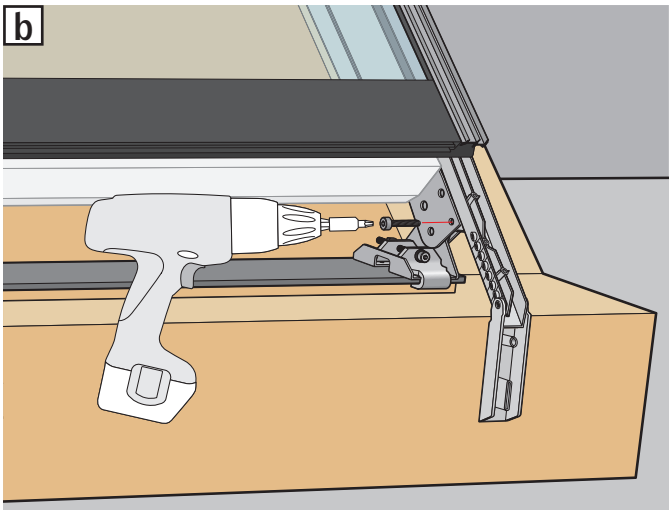
b

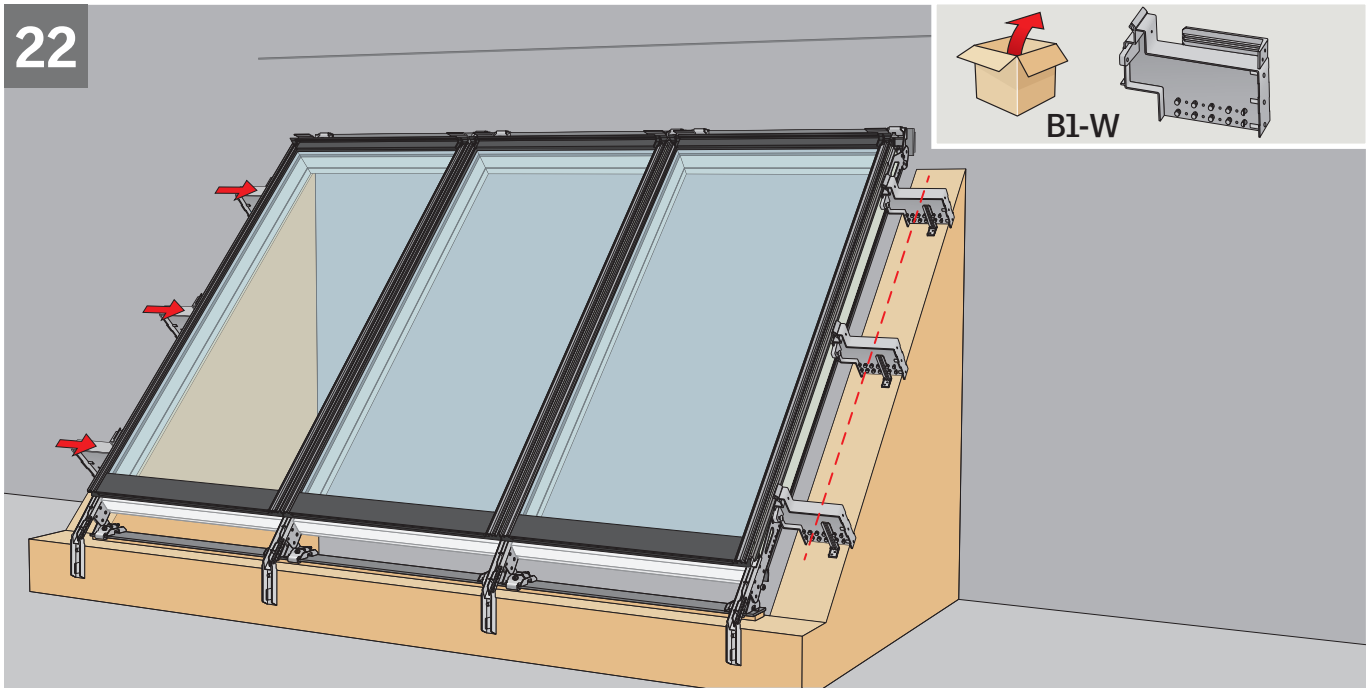
22
B1-W

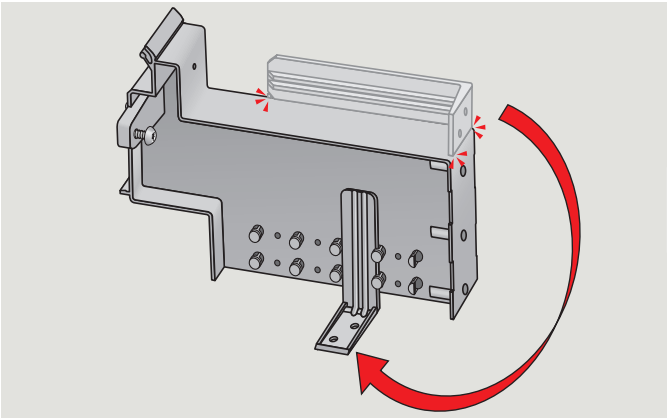

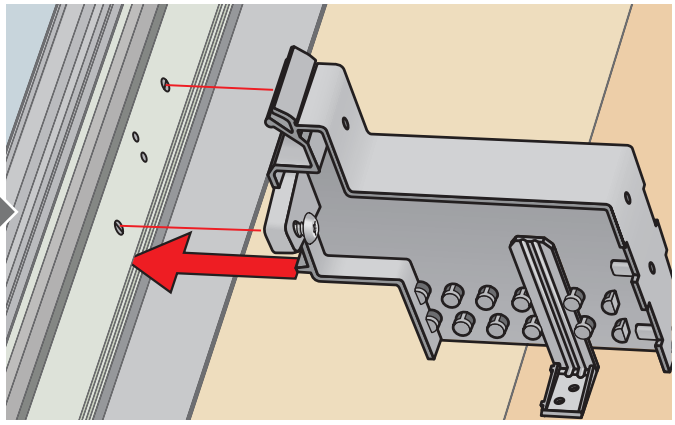

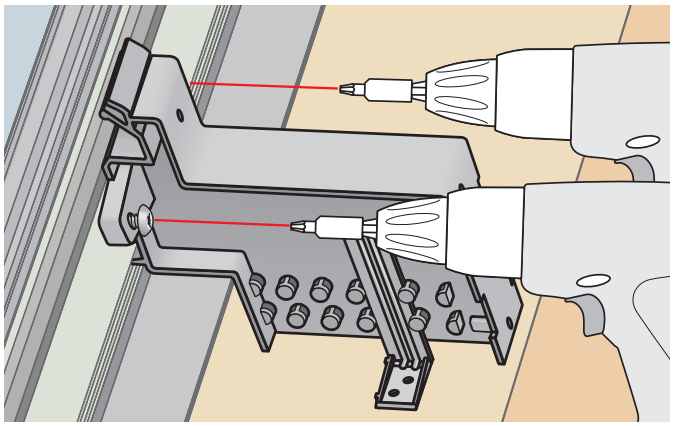

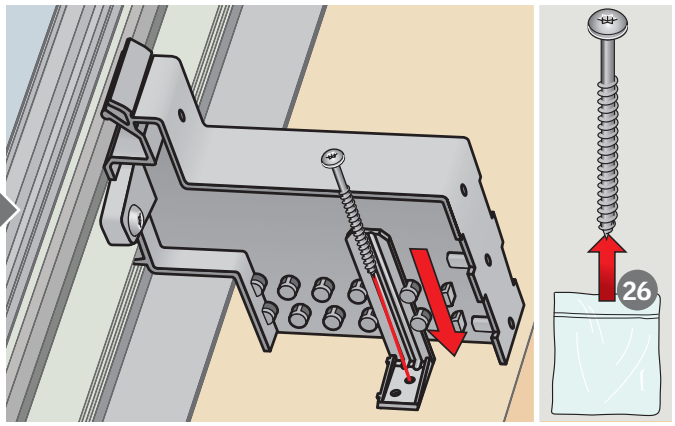
26

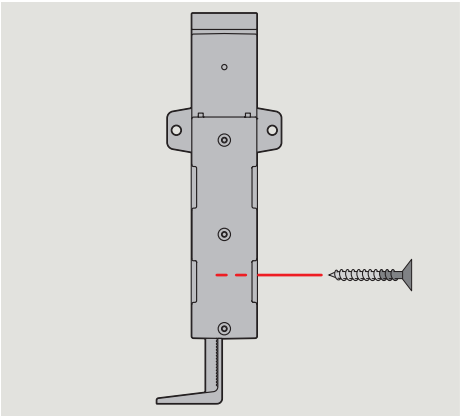

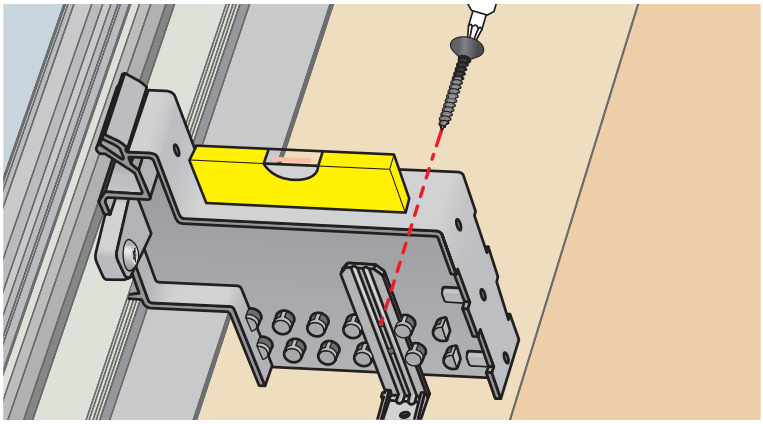

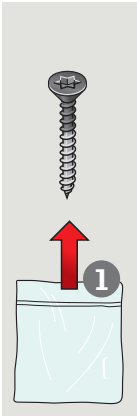
1

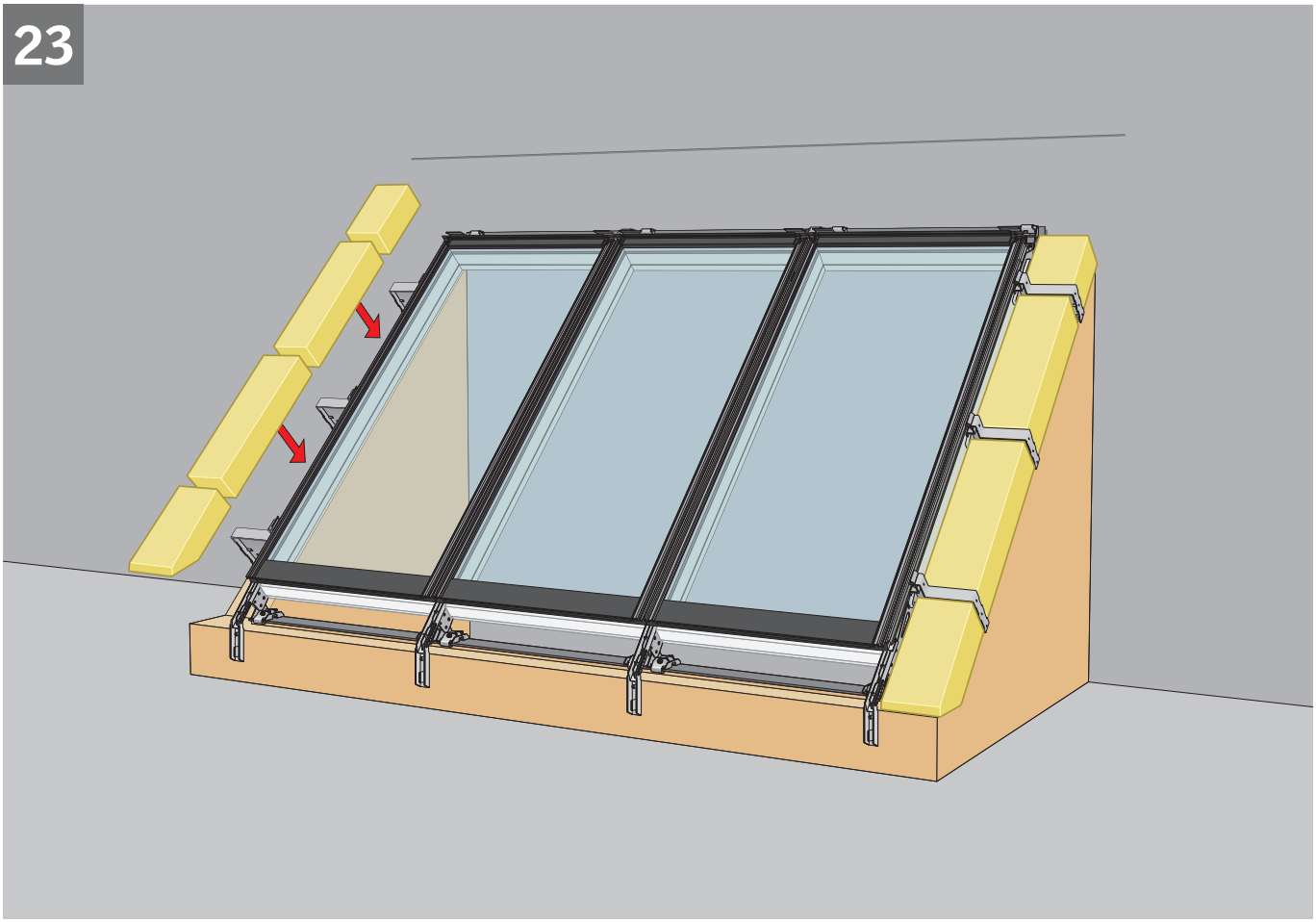
23

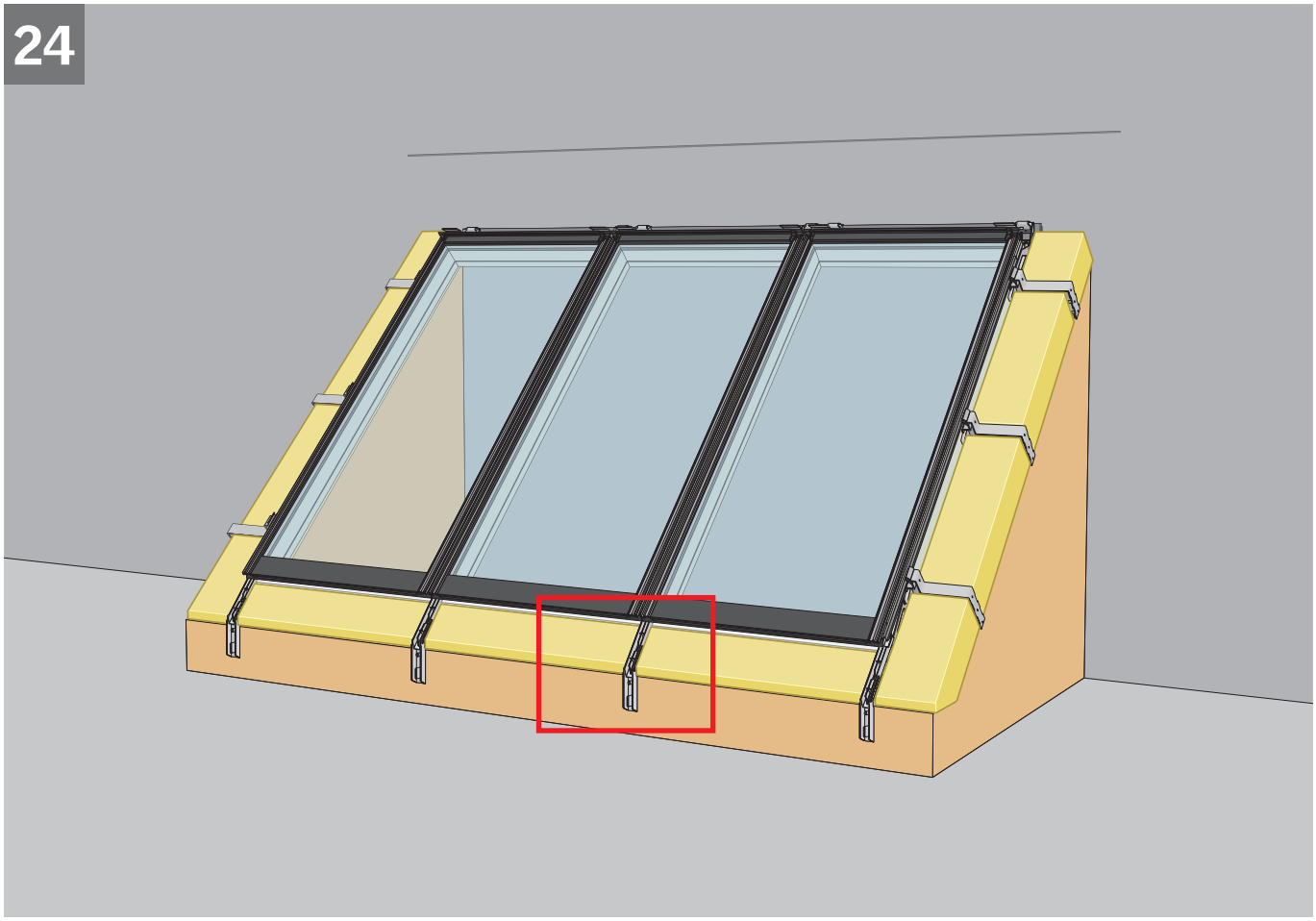
24

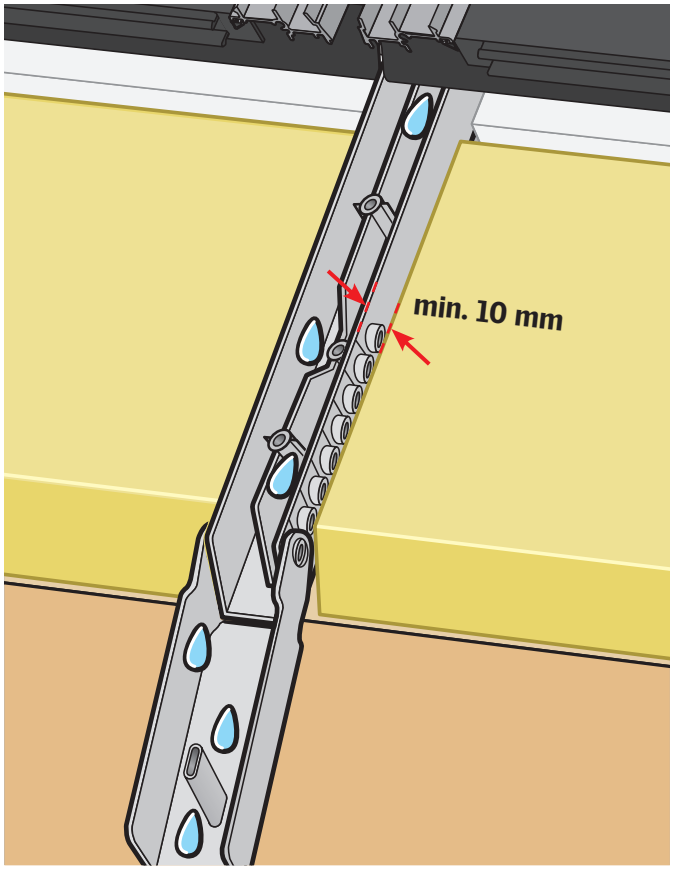
min. 10 mm

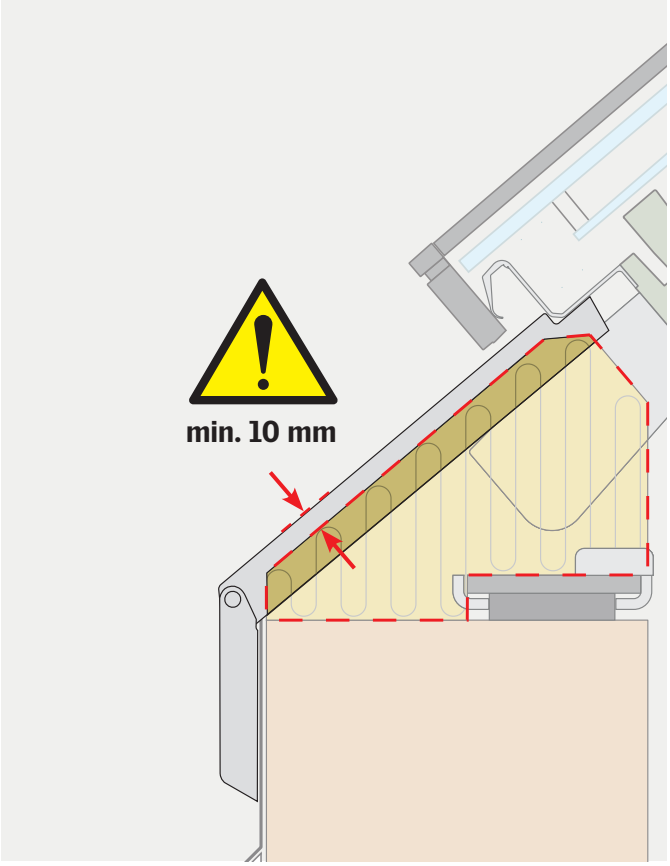
min. 10 mm

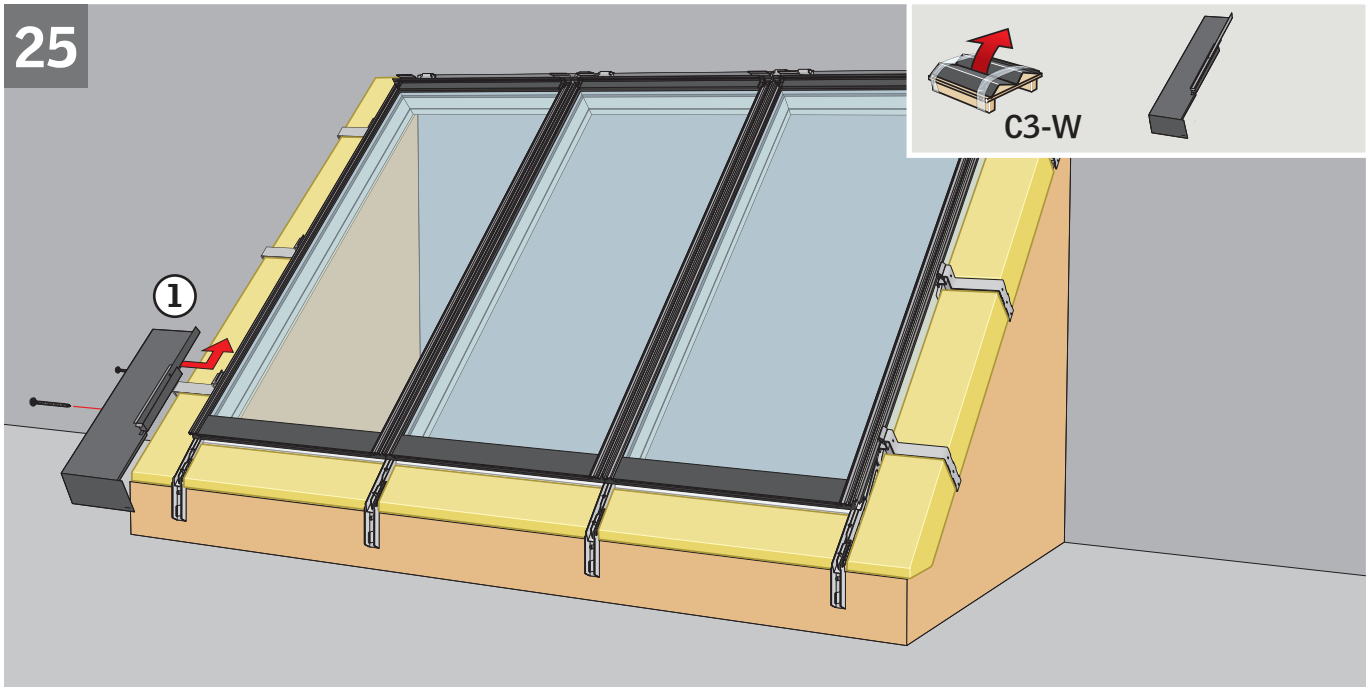
25
1
C3-W

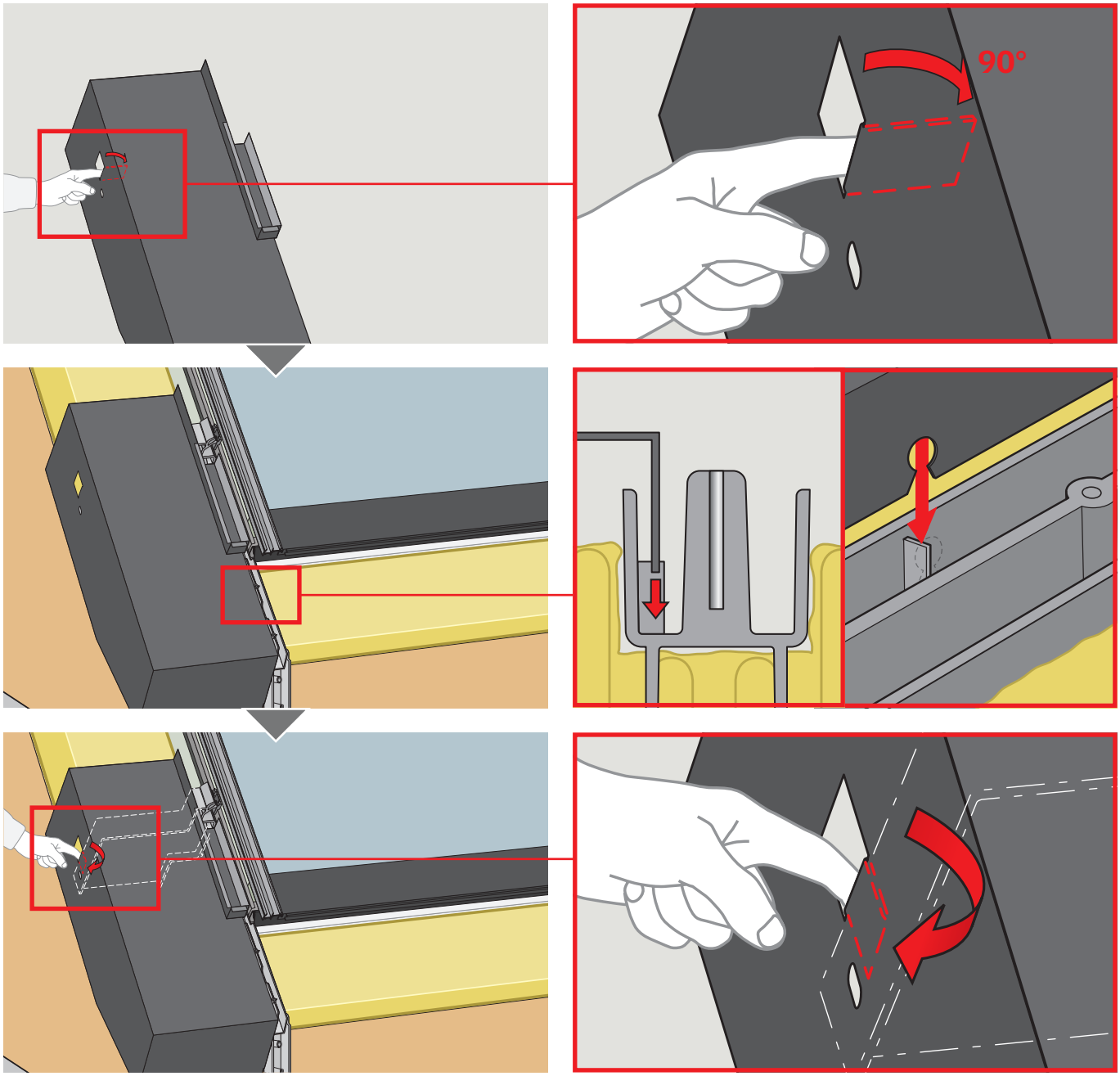
90°

26

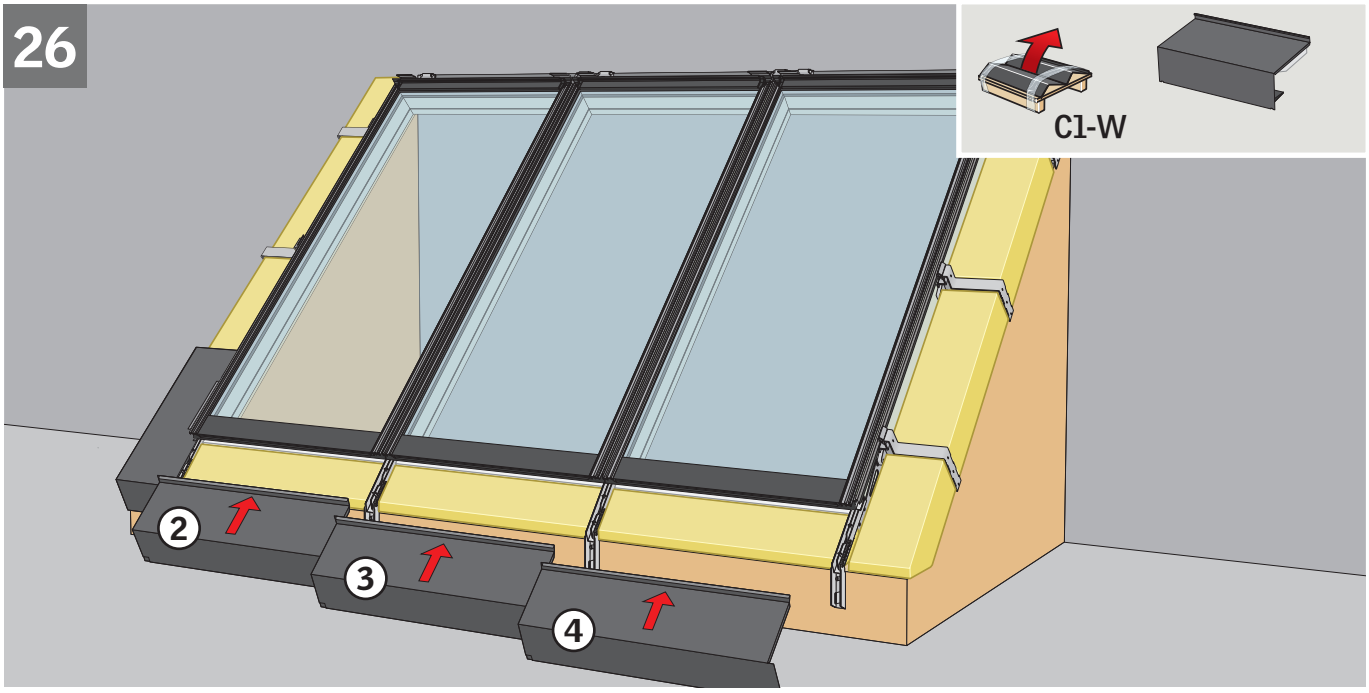

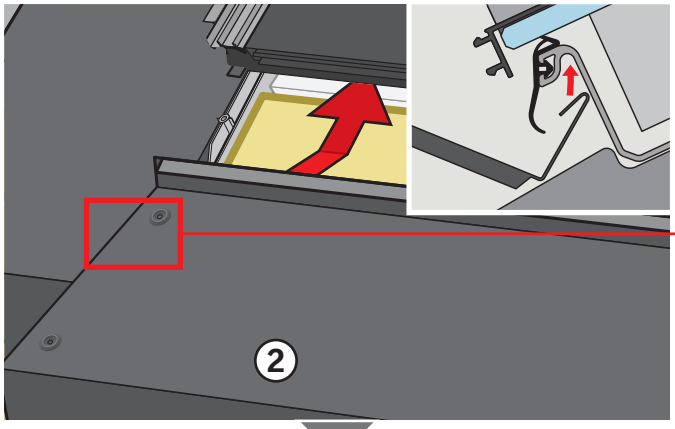

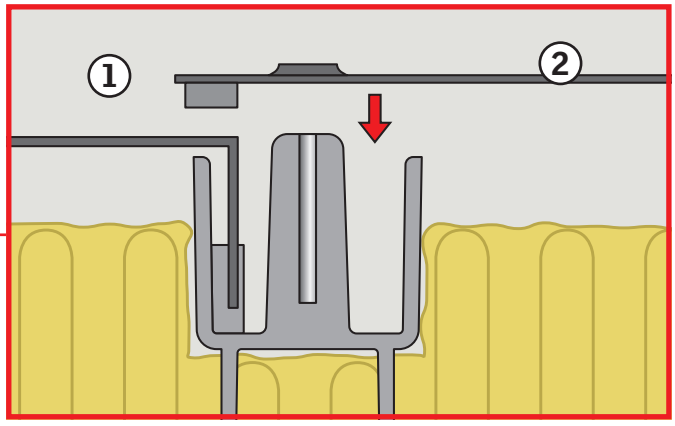

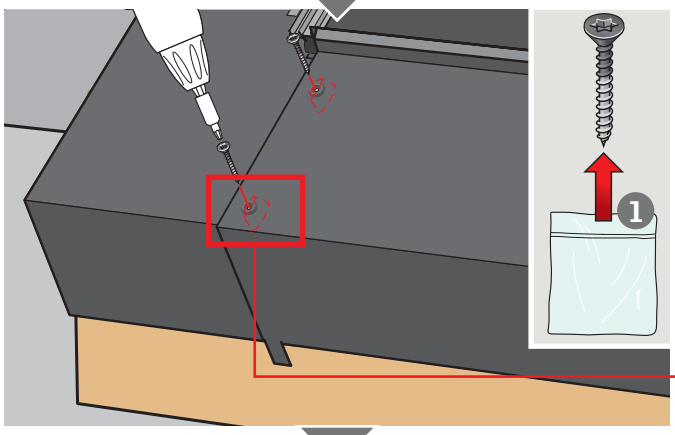

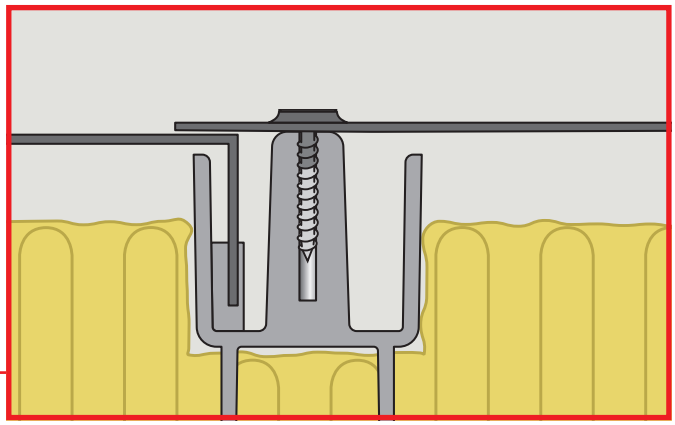

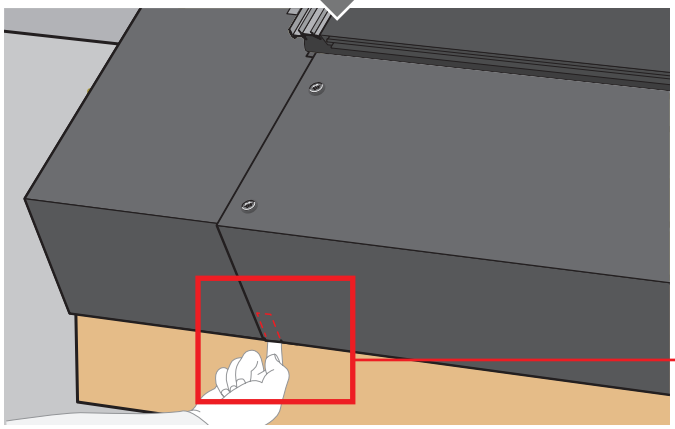

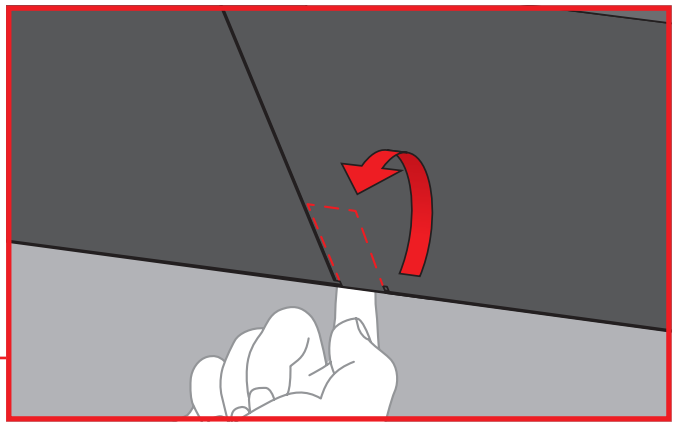

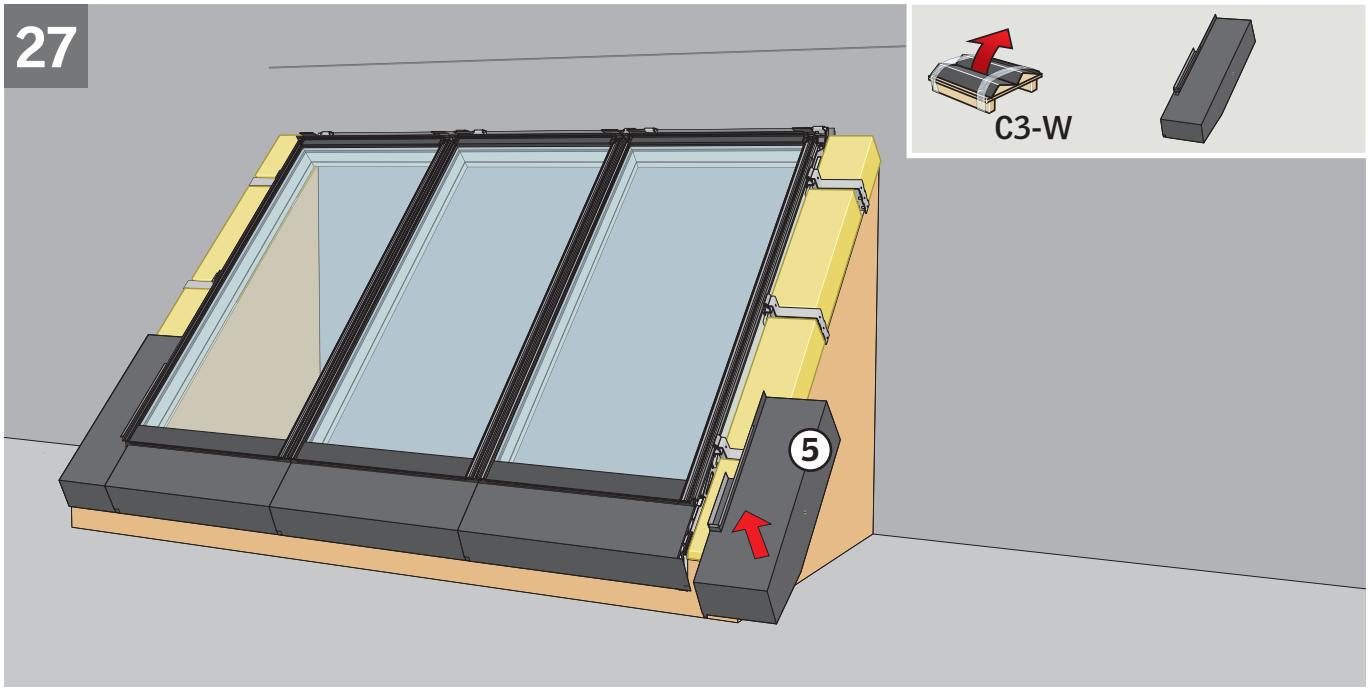
27
C3-W
5

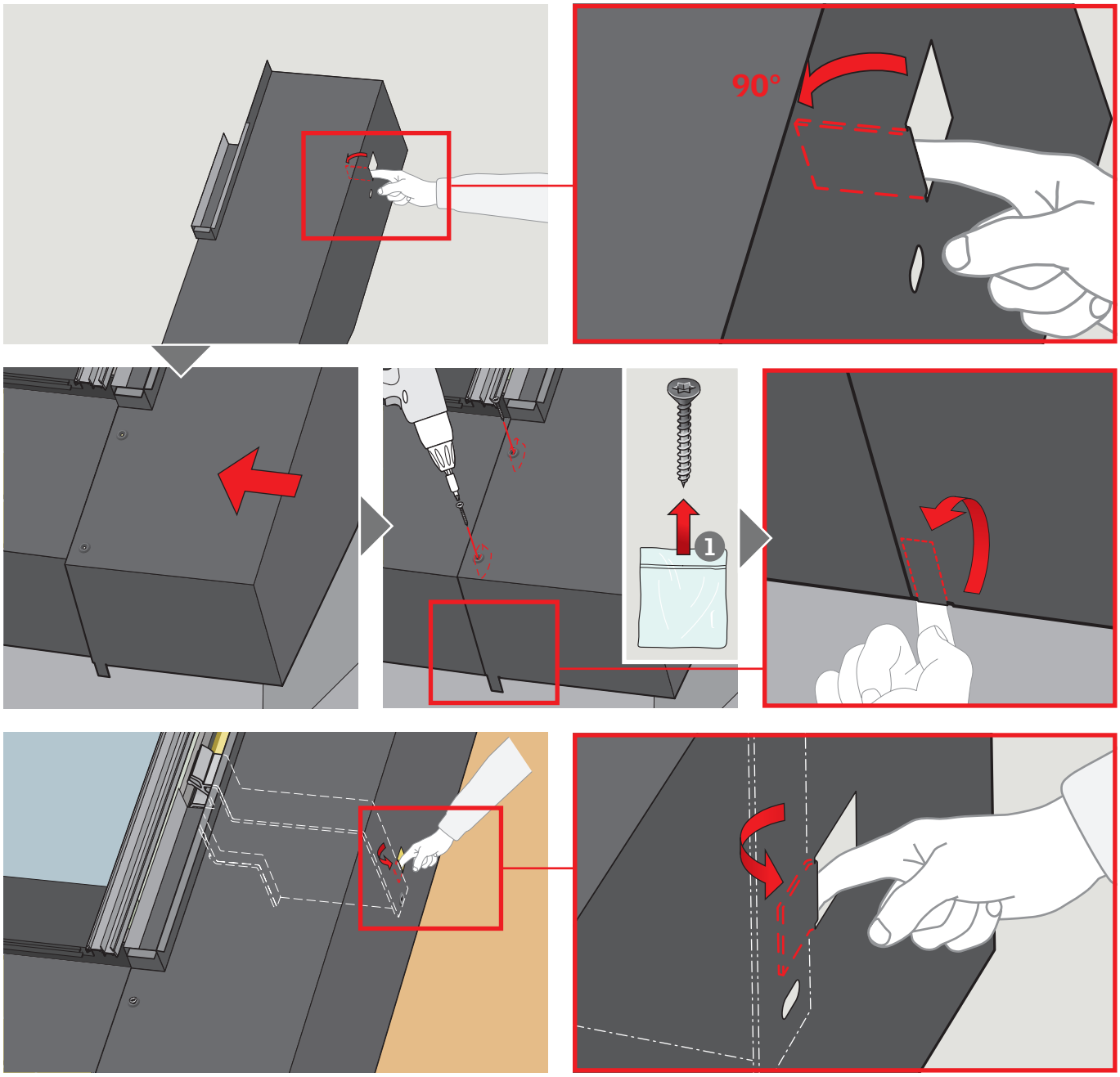
90°
1

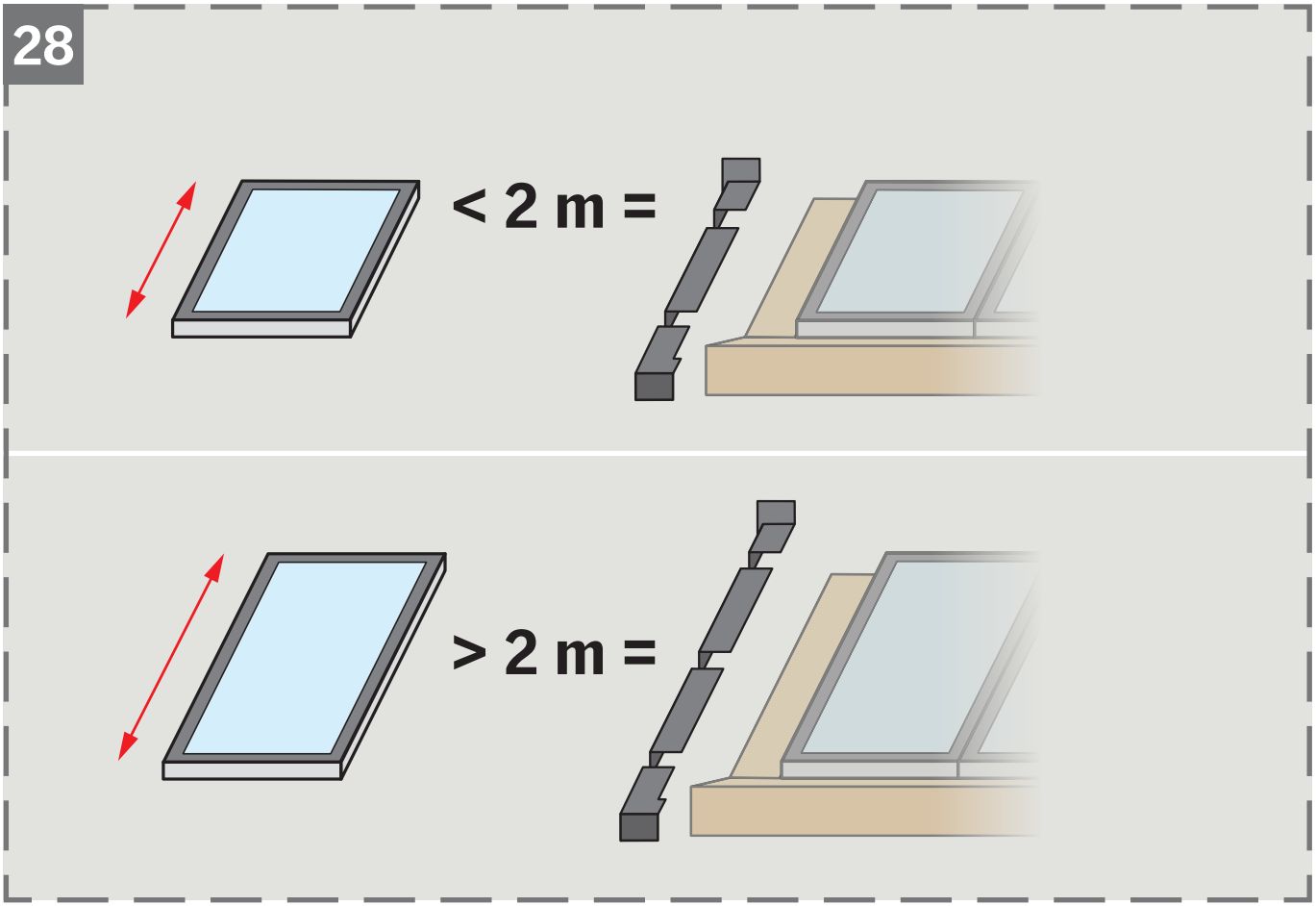
28
< 2 m =
> 2 m =

29

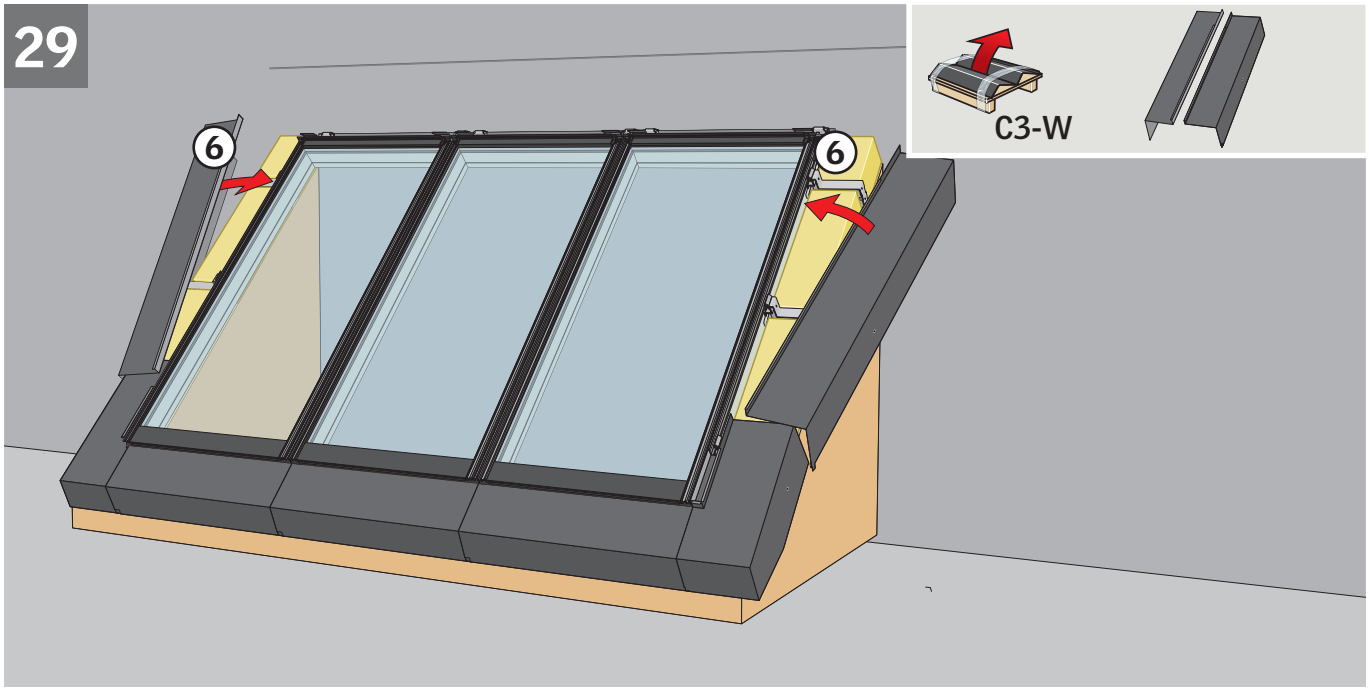

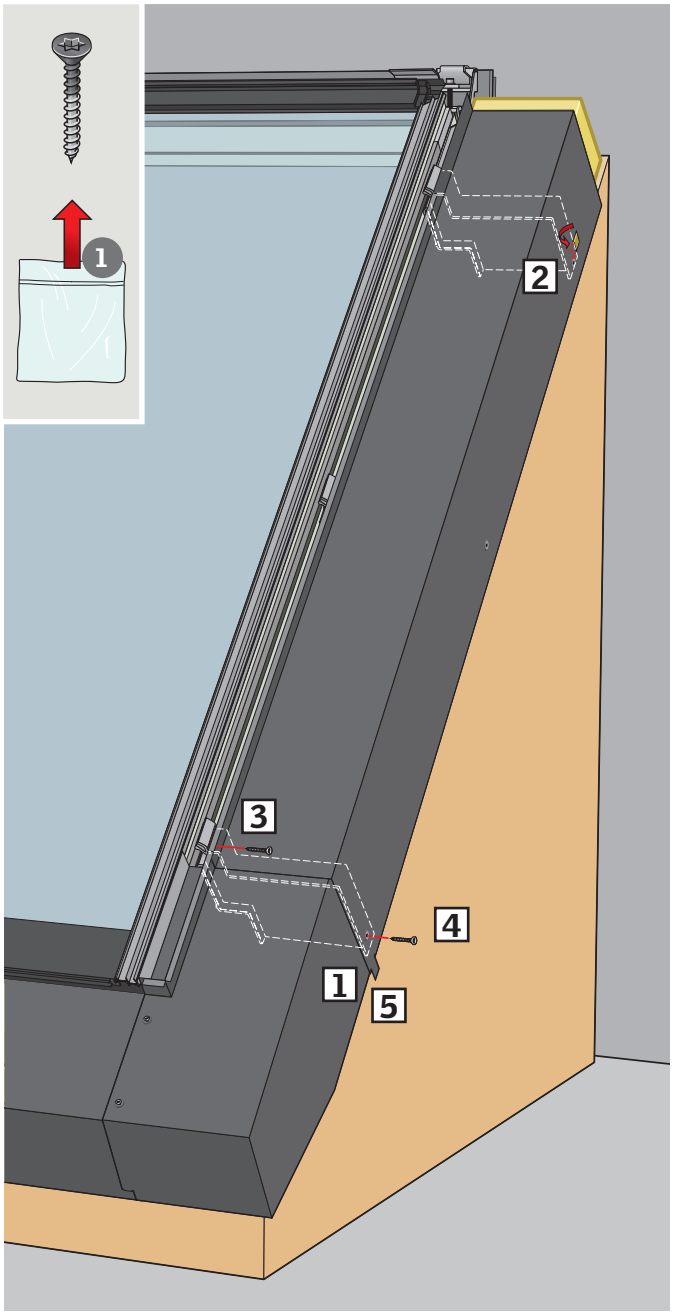

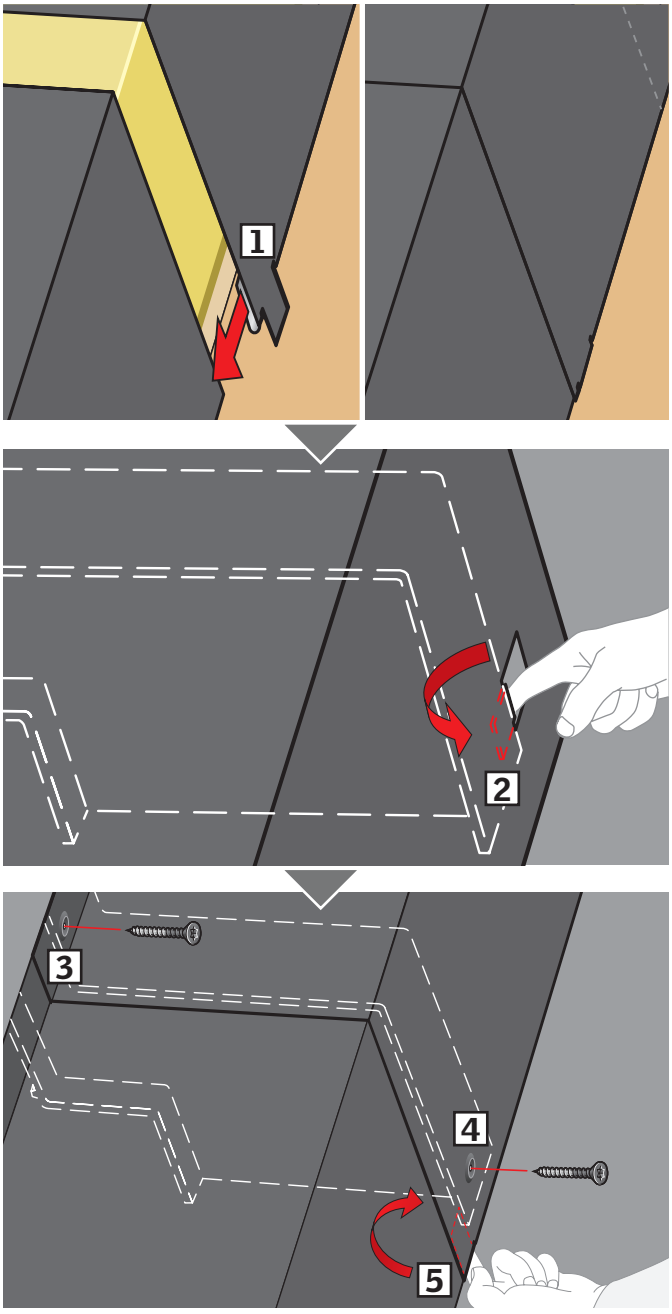

30

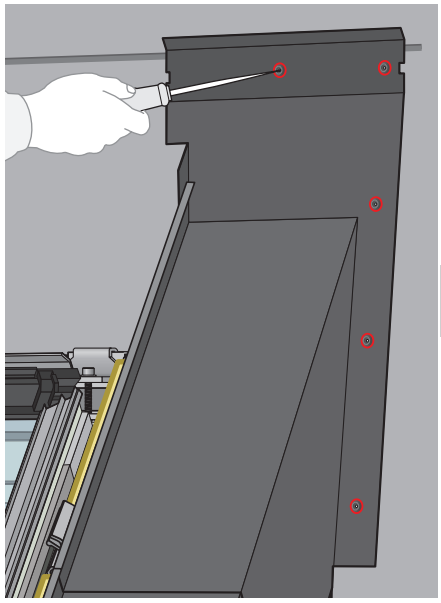

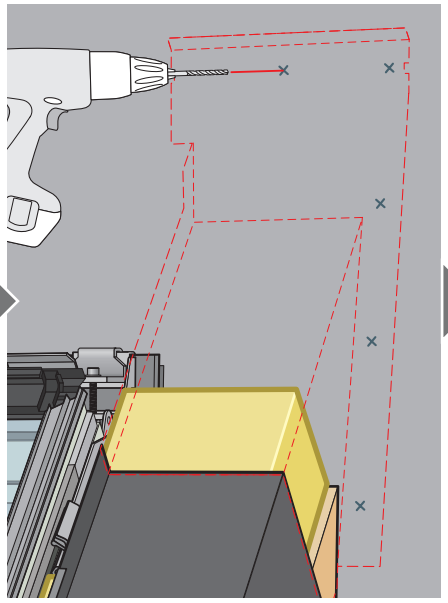

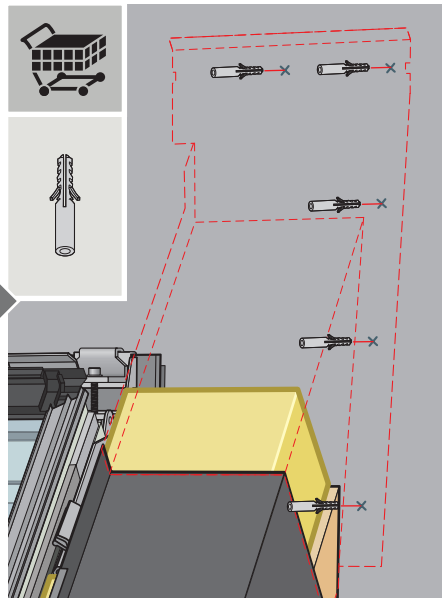

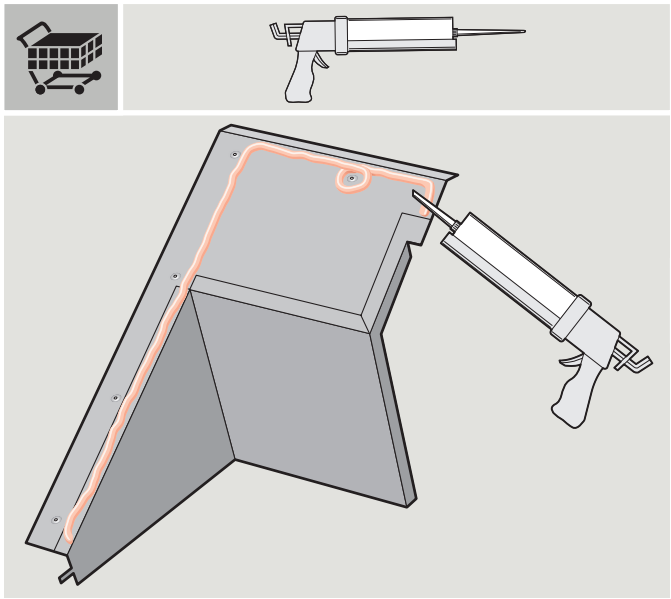

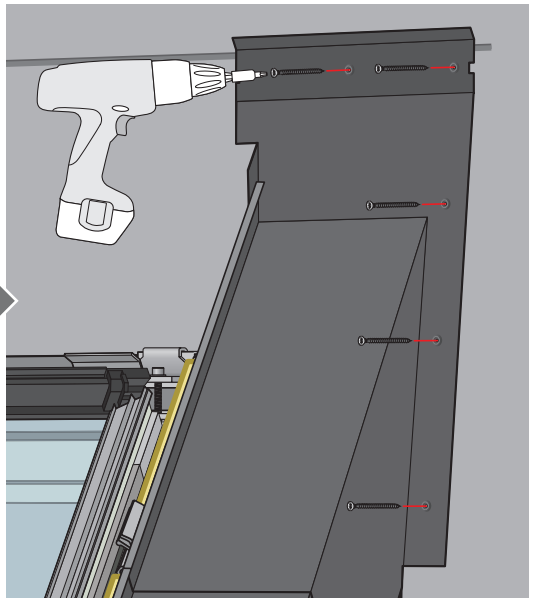

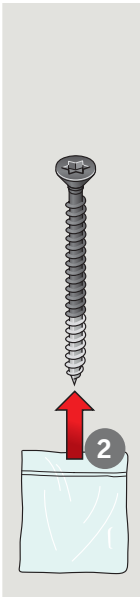

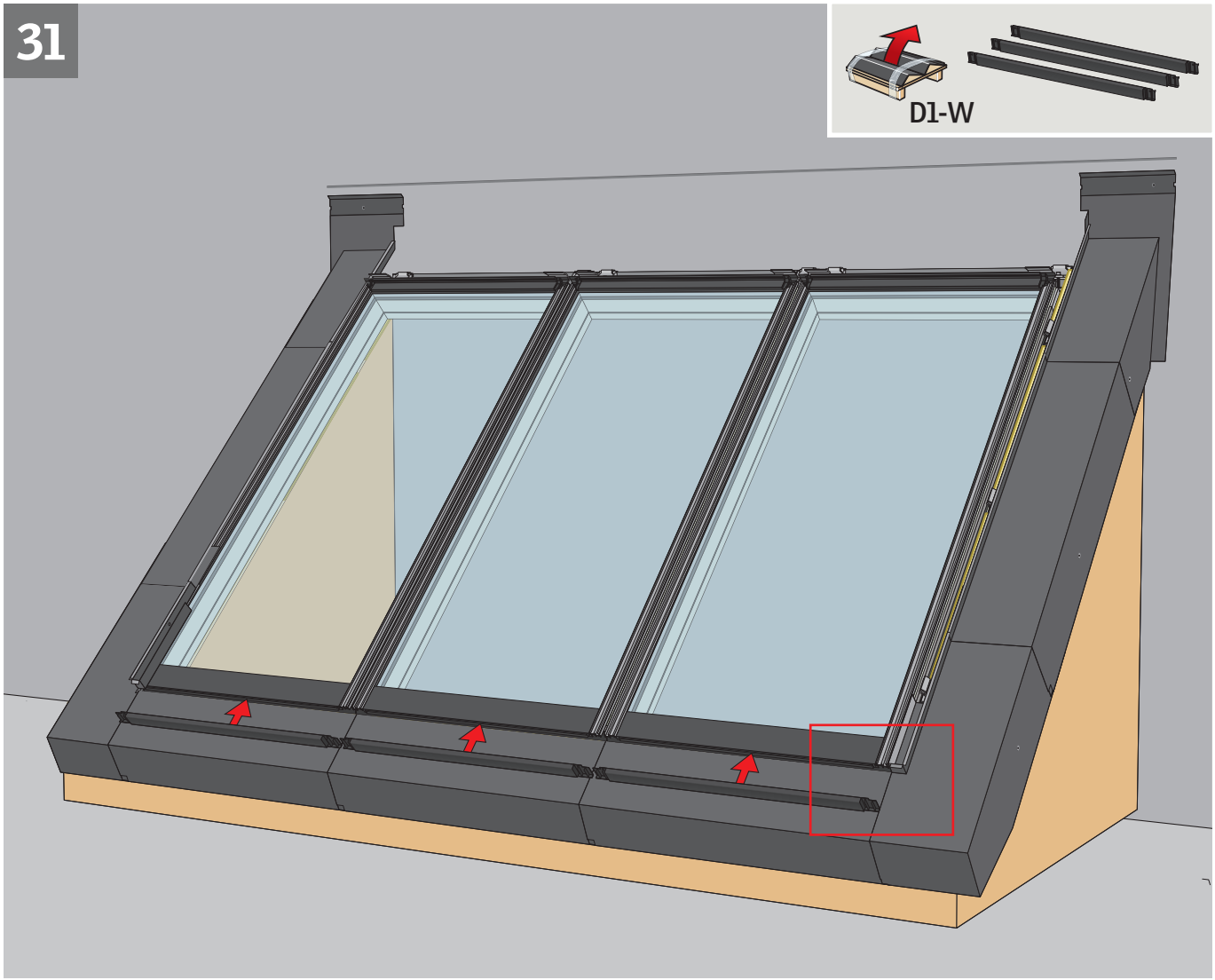
31
D1-W

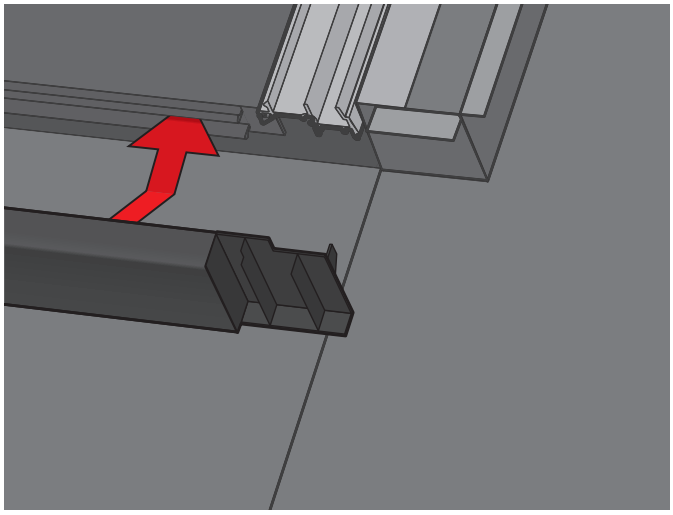

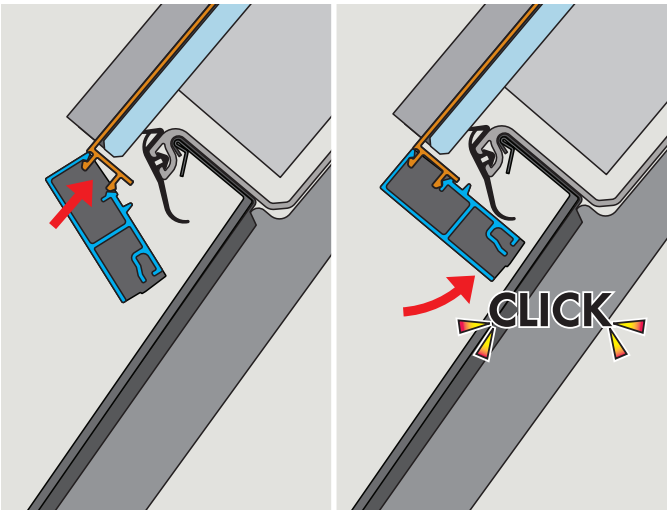
CLICK

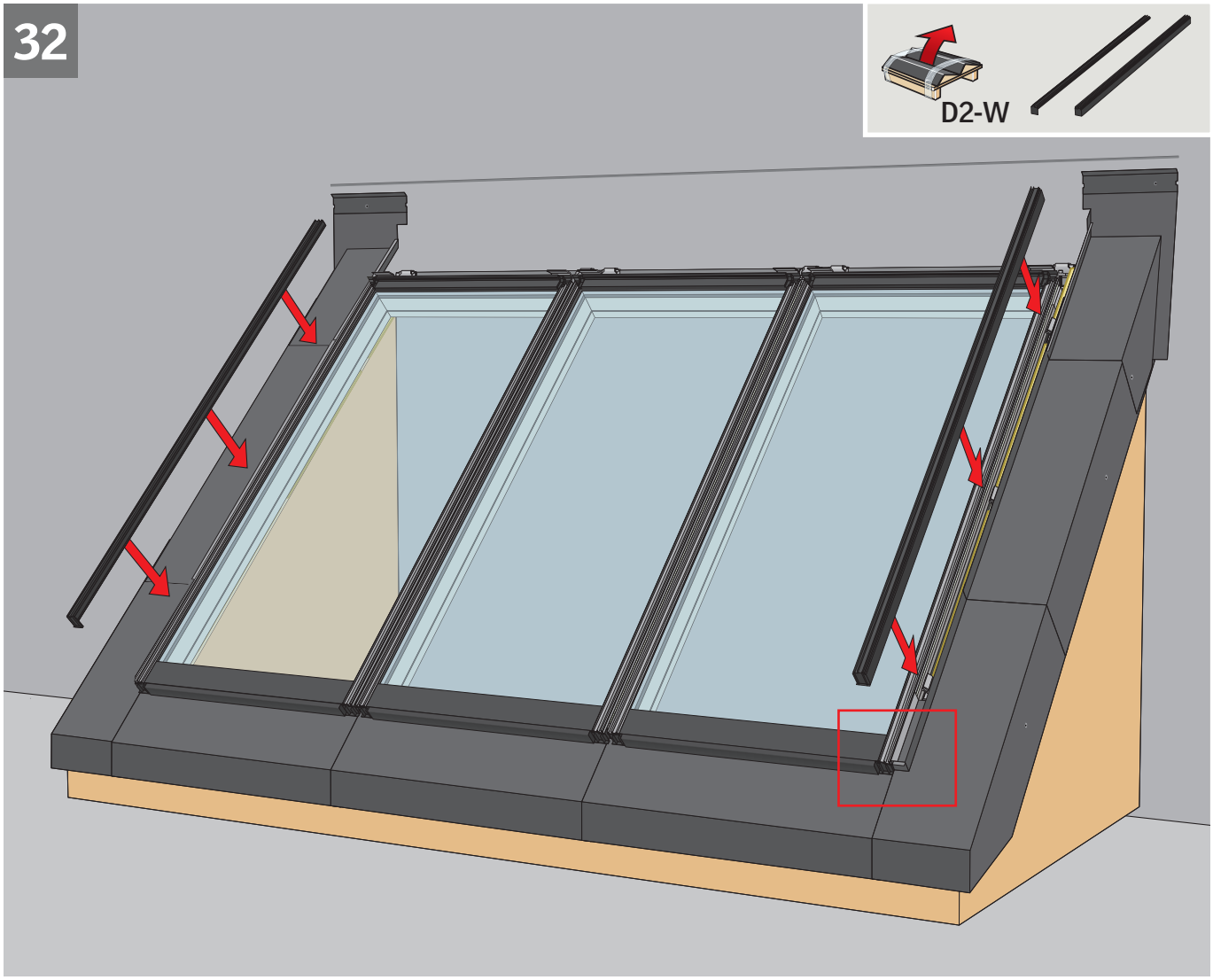
32
D2-W

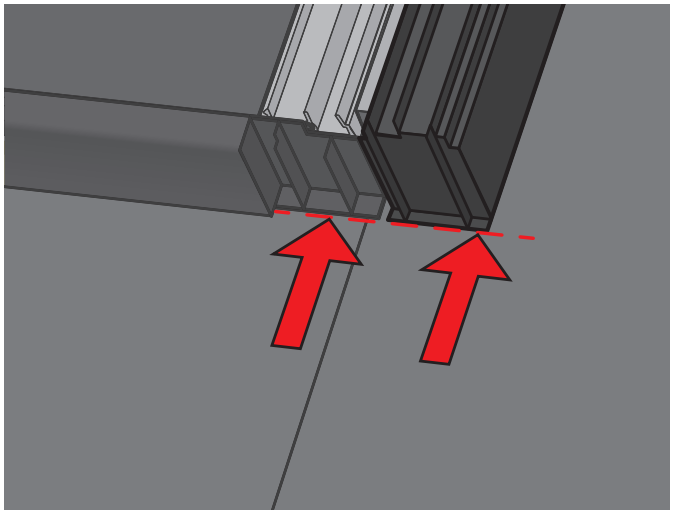

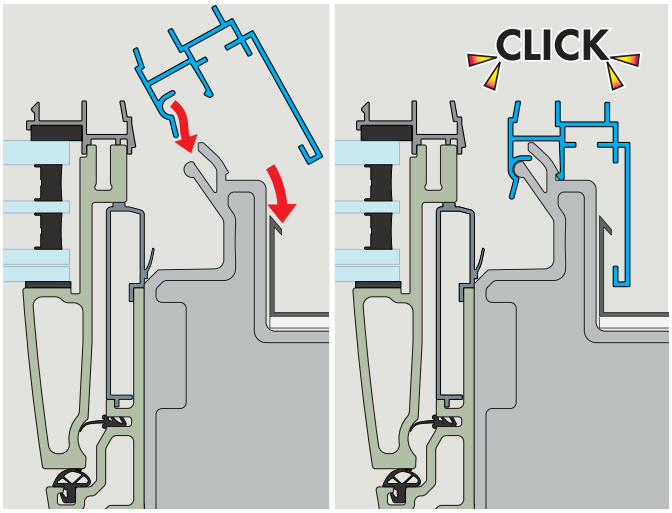
CLICK

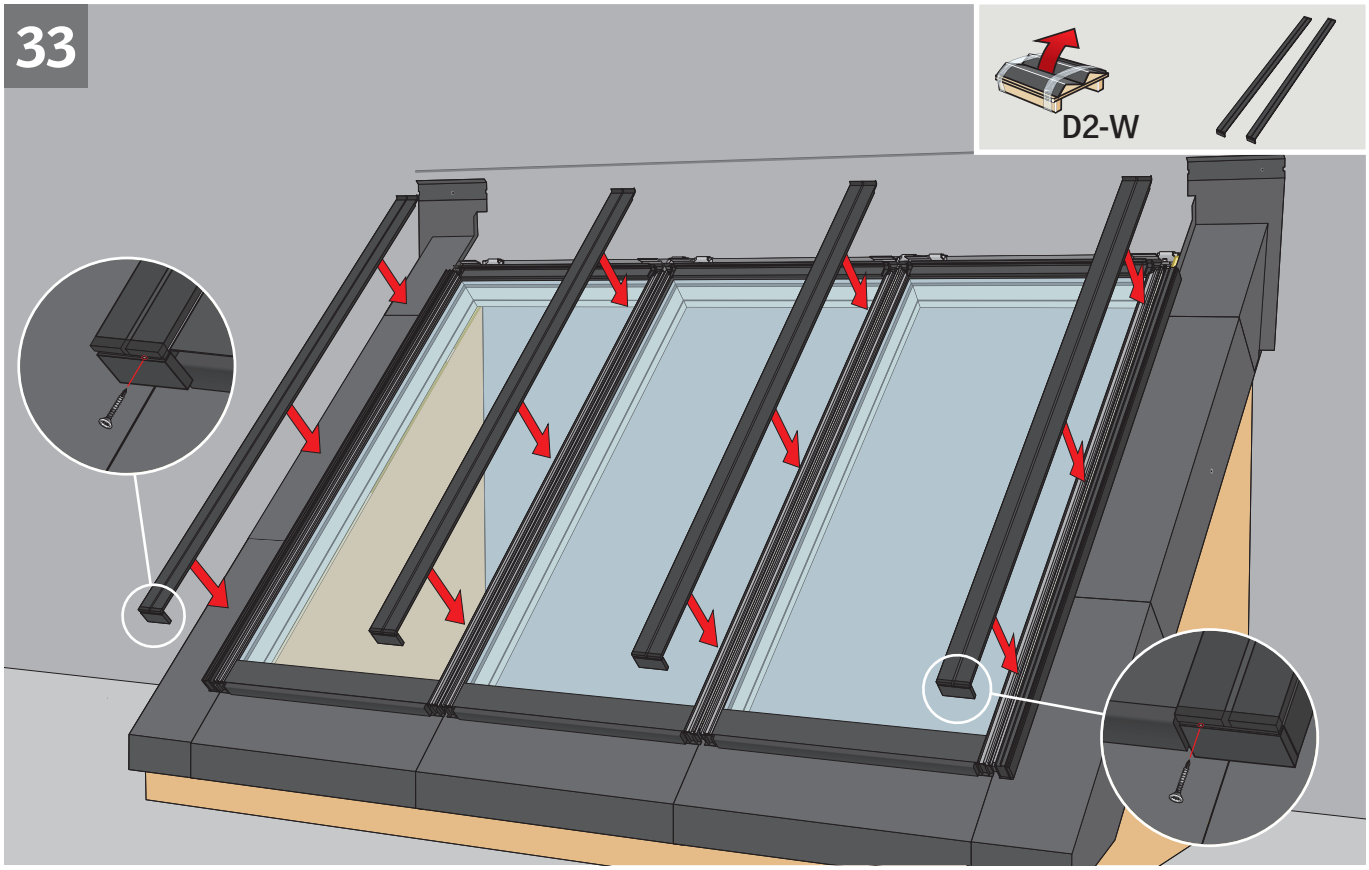
33
D2-W

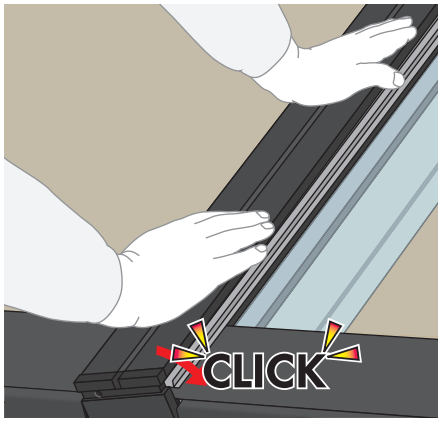
CLICK

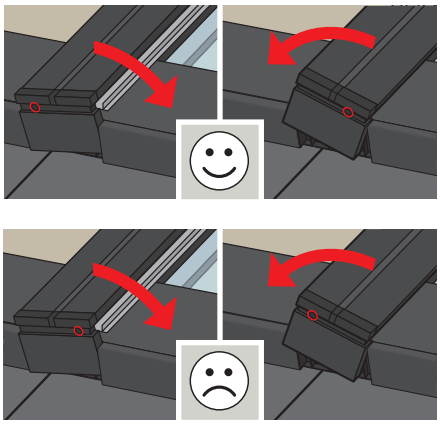

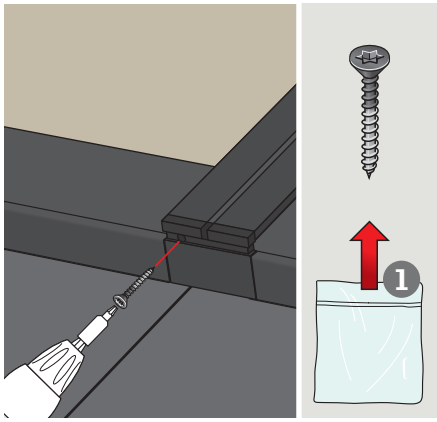
1

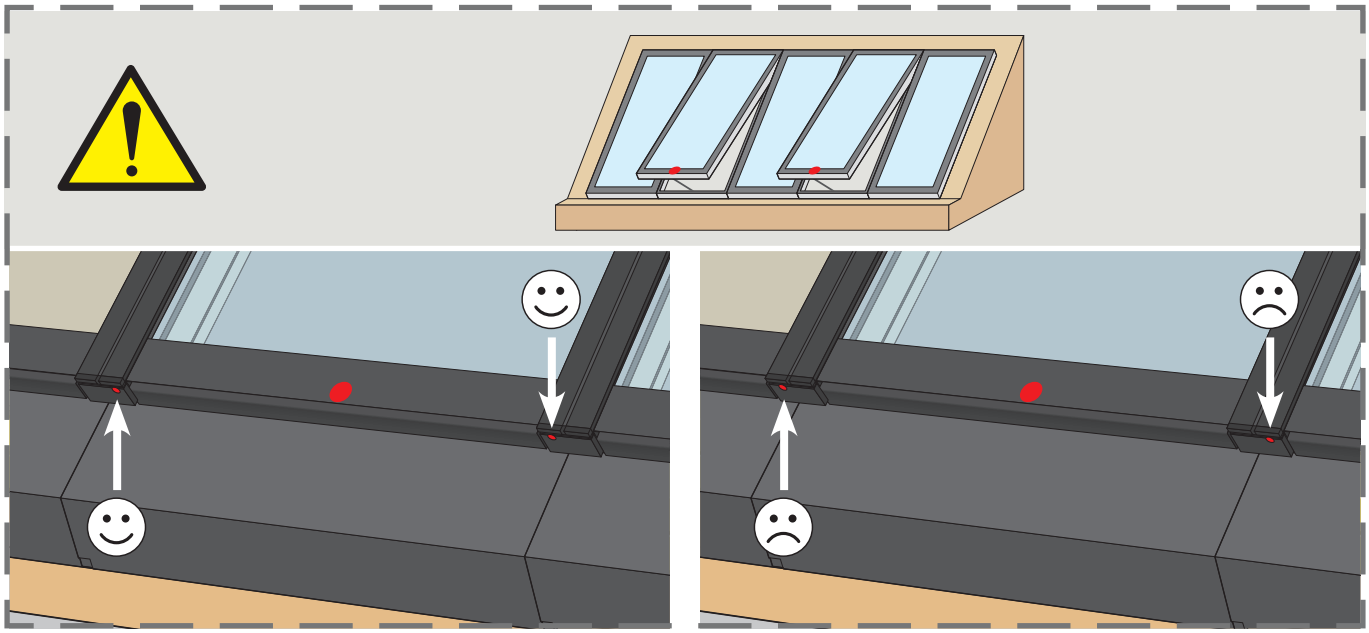

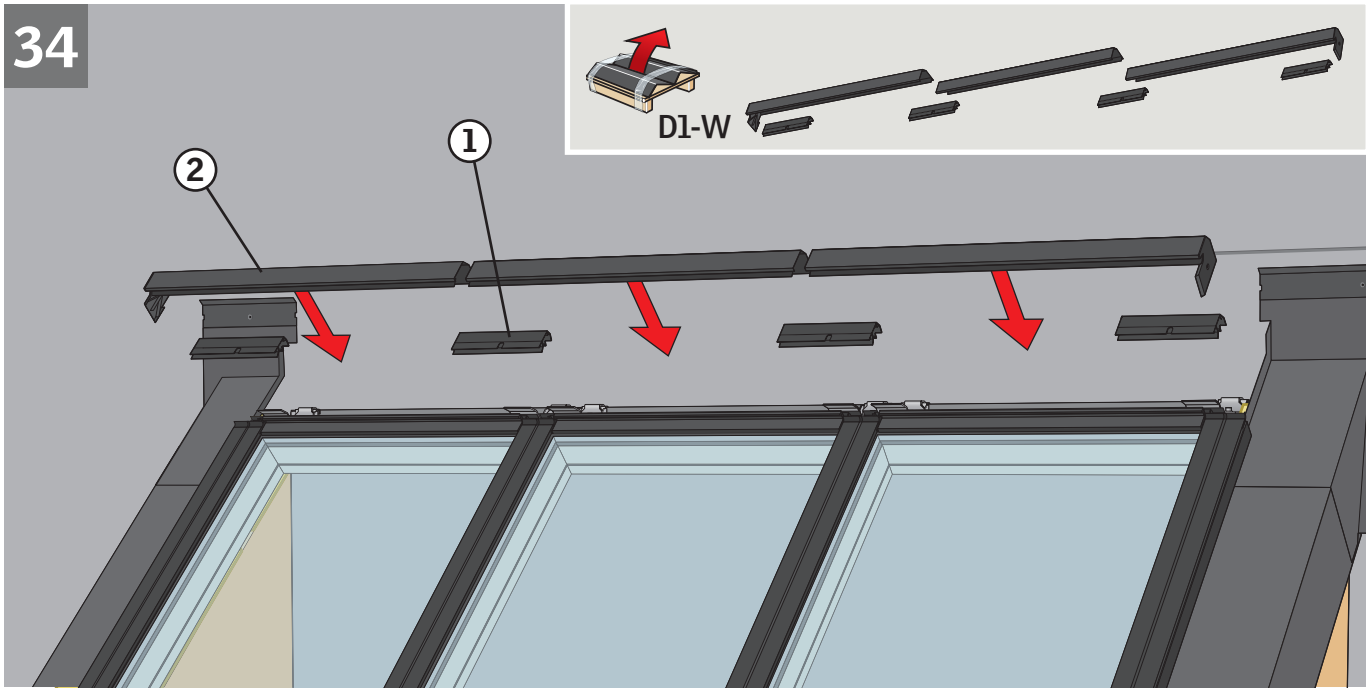
34
D1-W
1
2

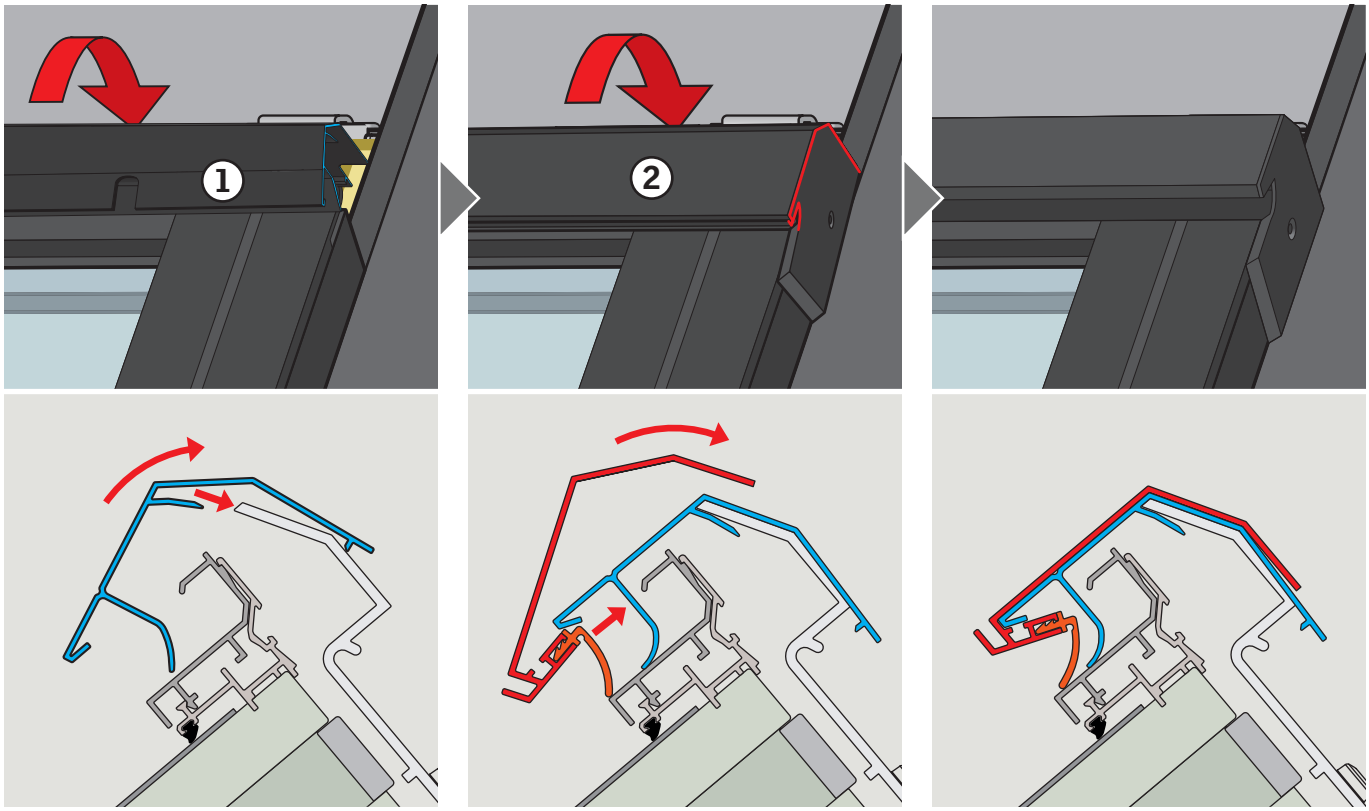
1
2

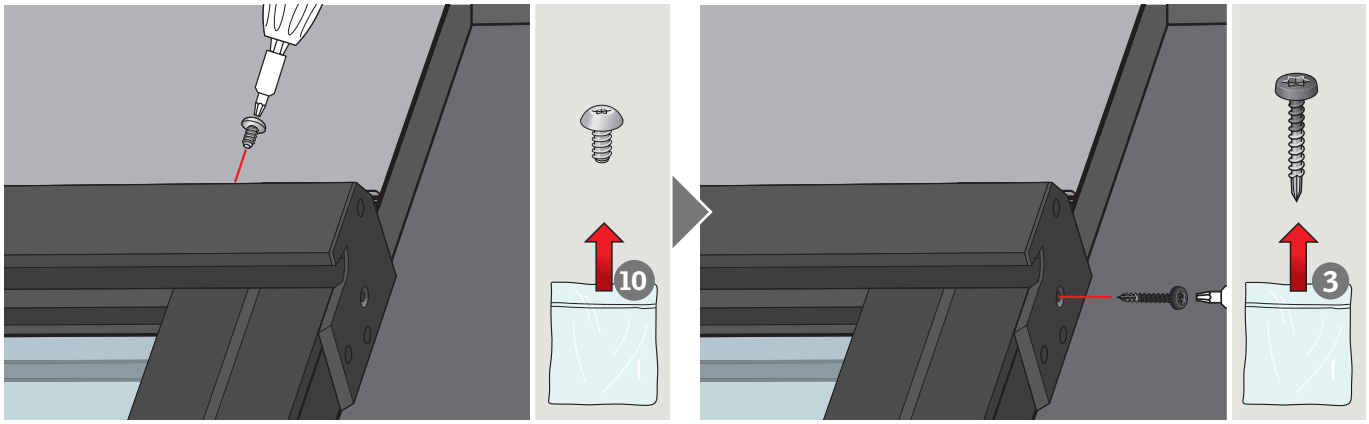
10
3

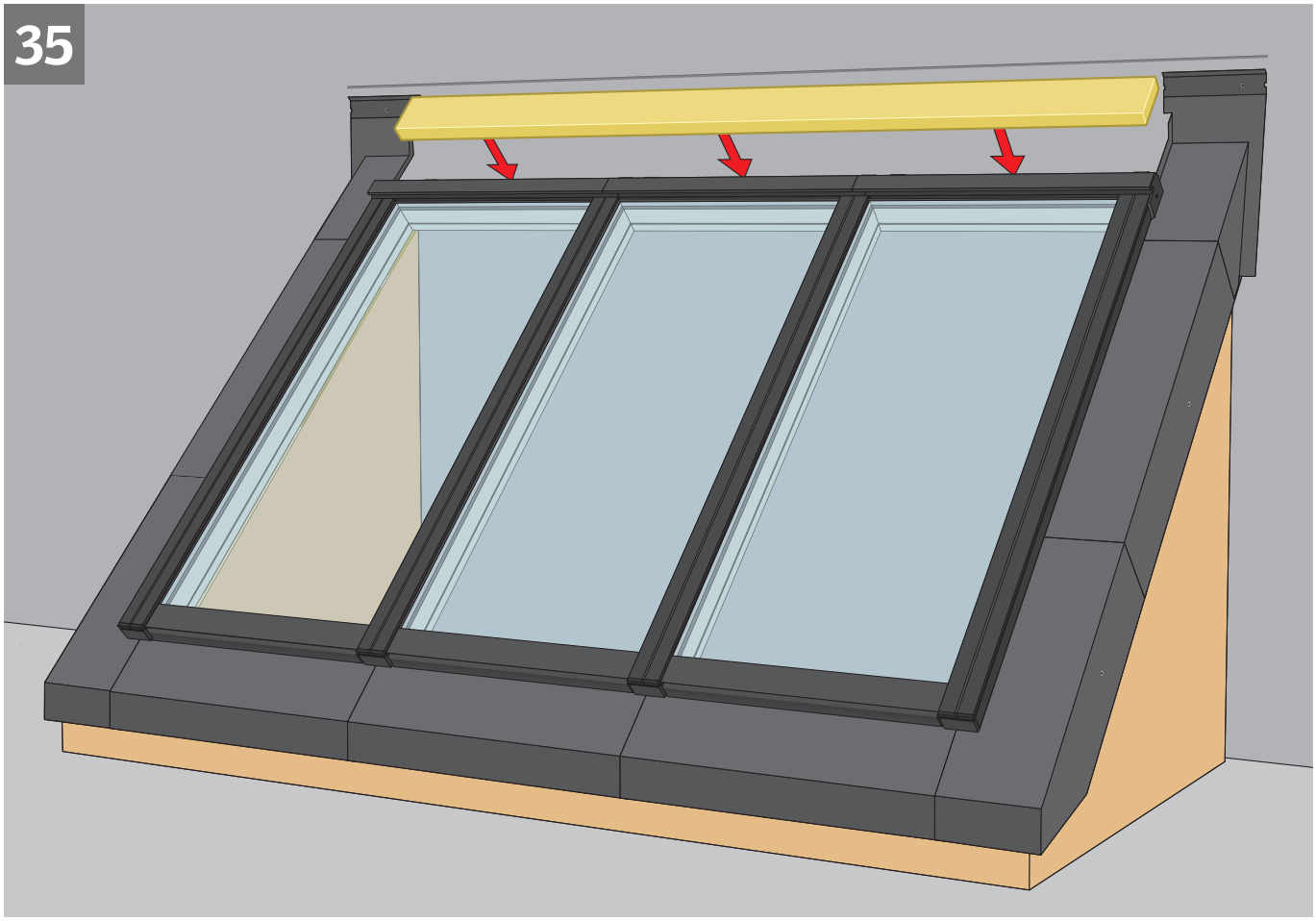
35

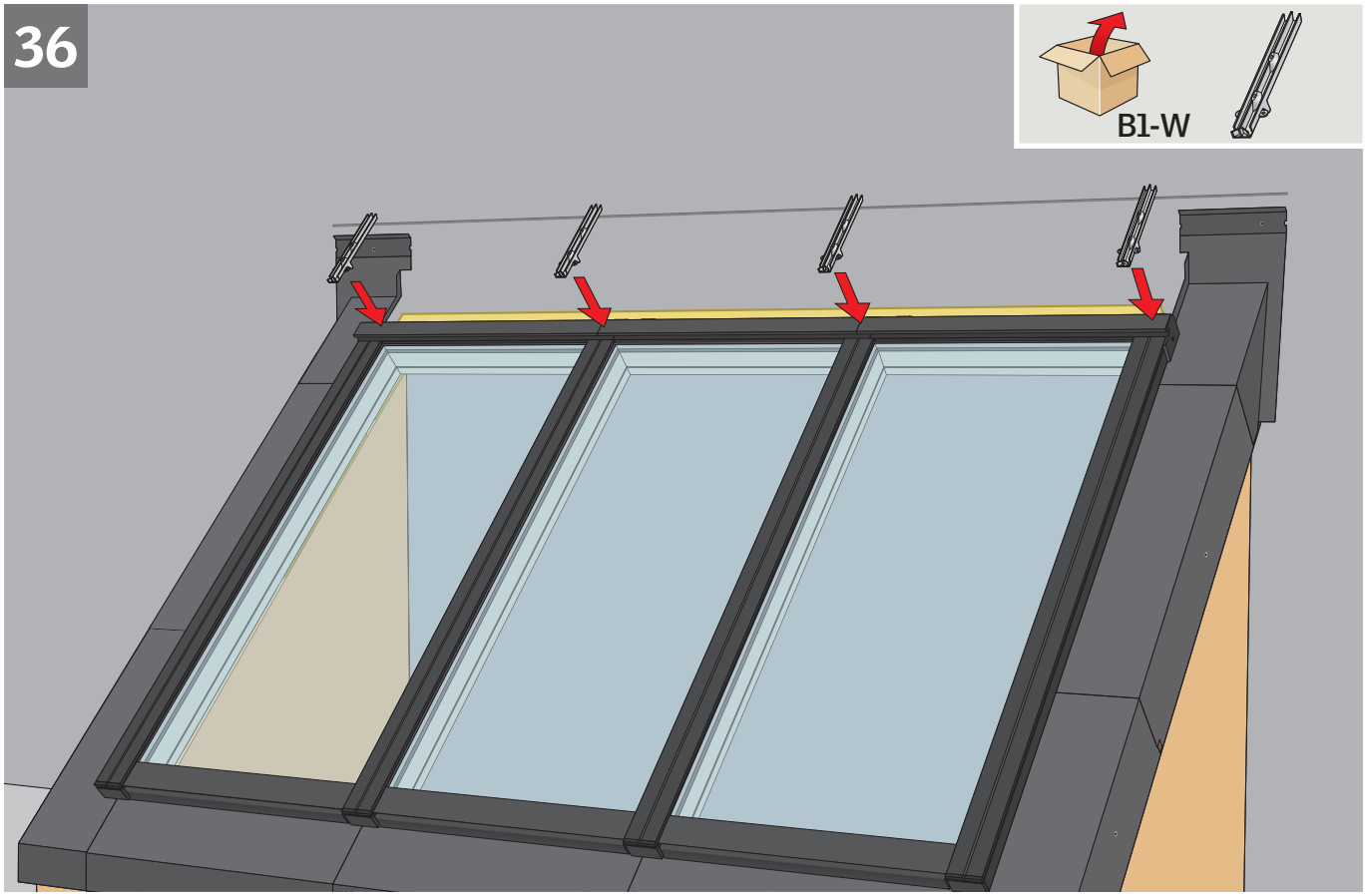
36
B1-W

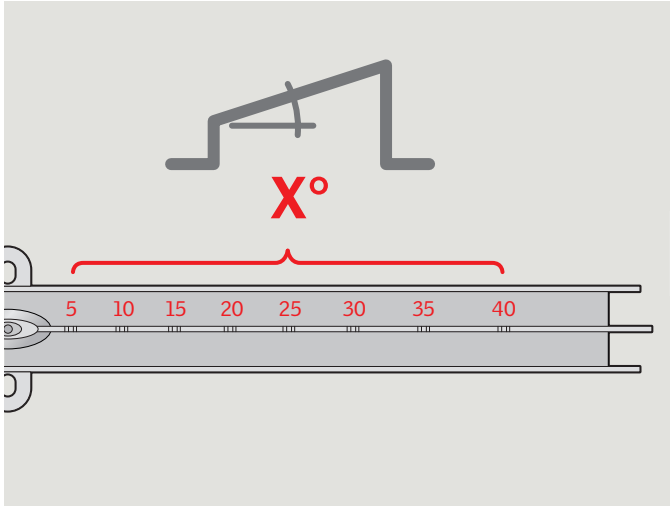
X°
5
10
15
20
25
30
35
40

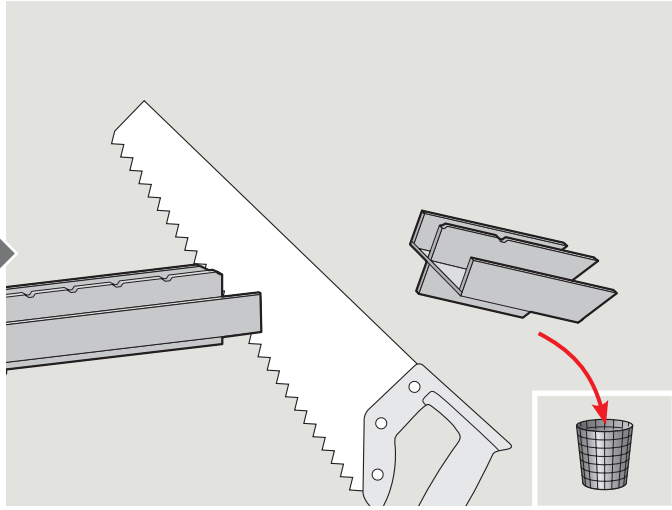

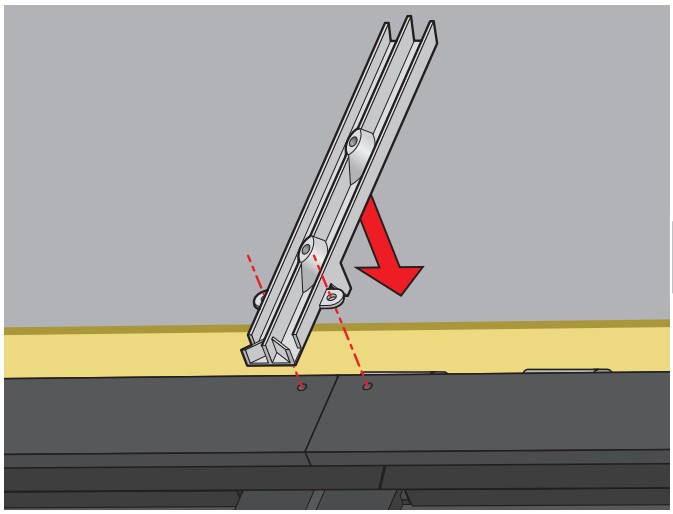

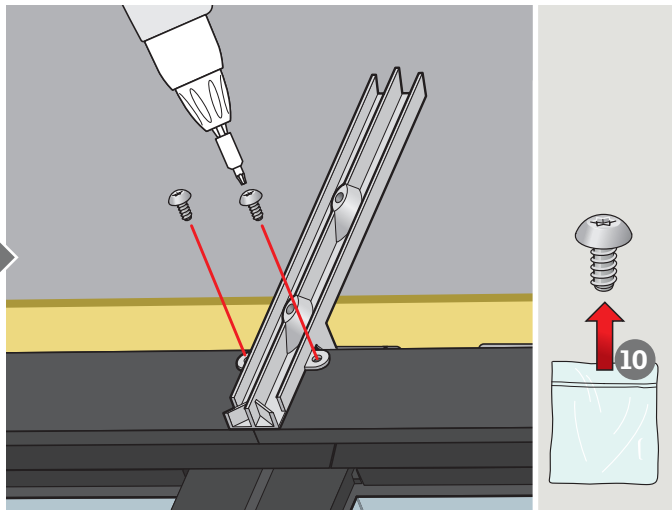
10

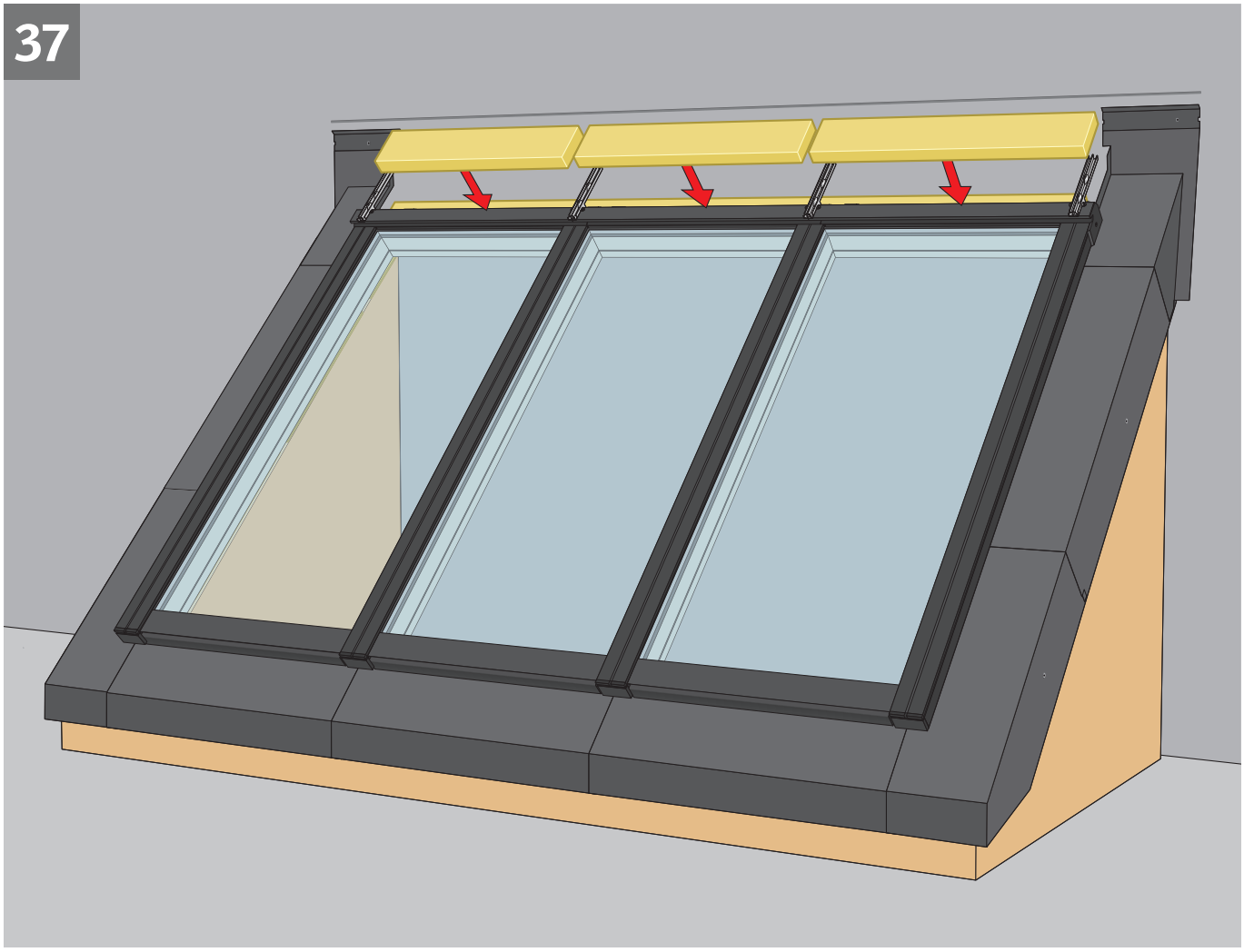
37

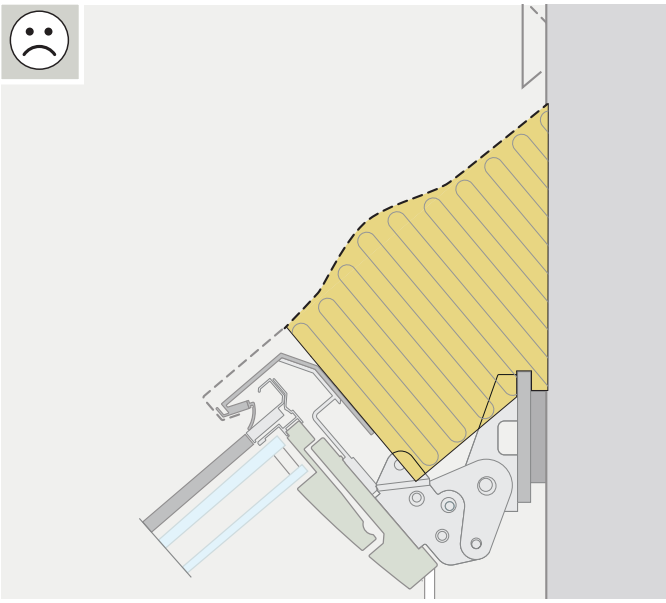

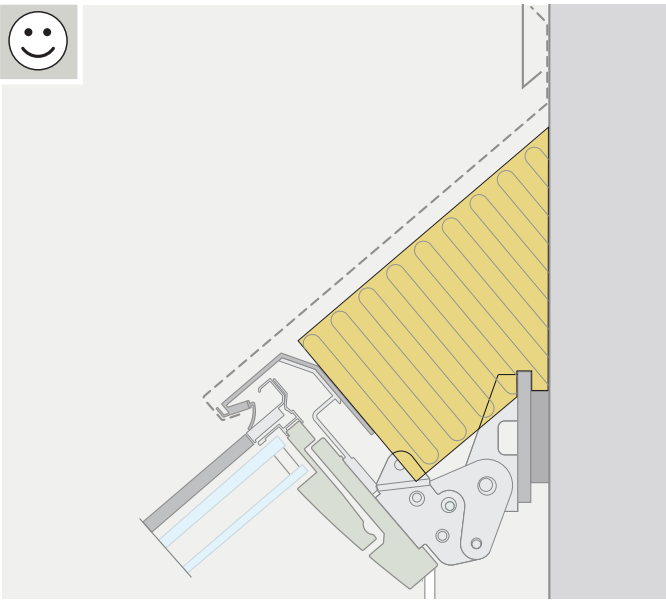

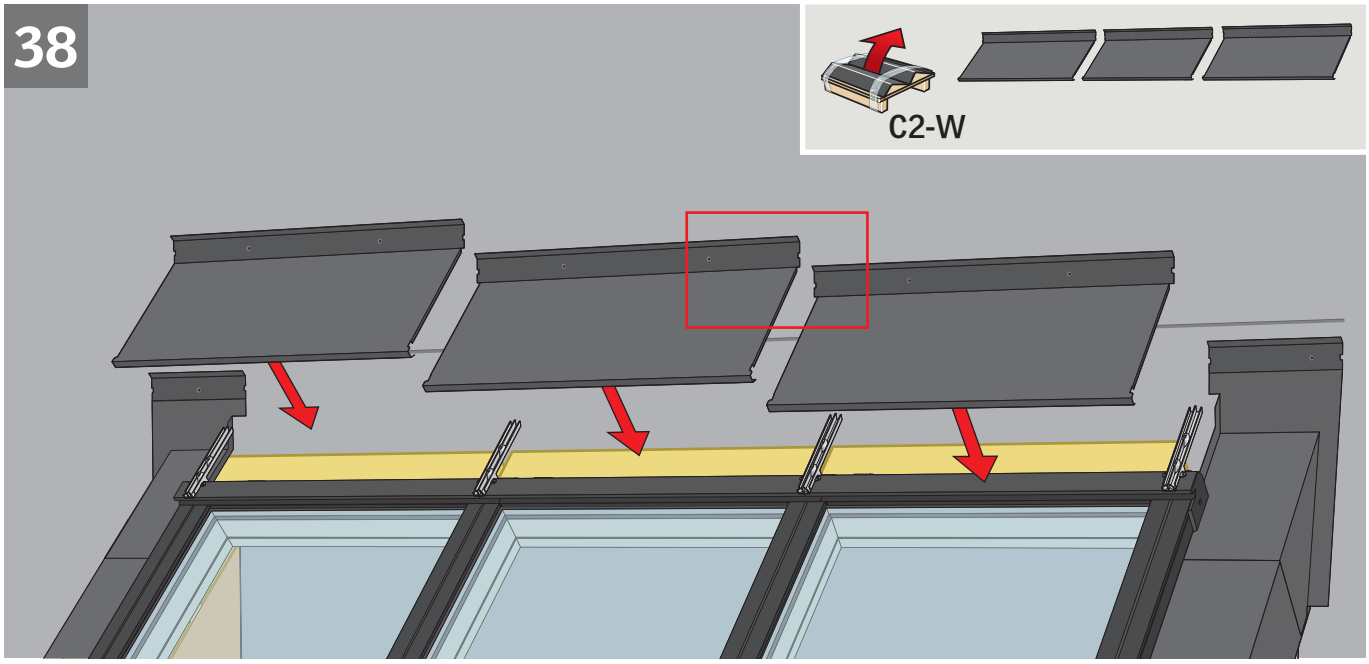
38
C2-W

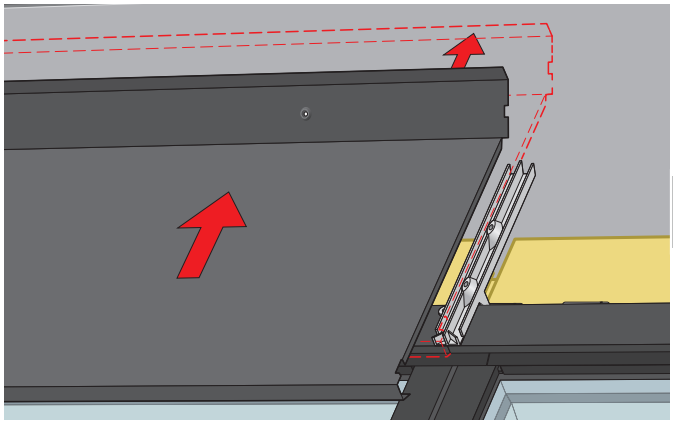

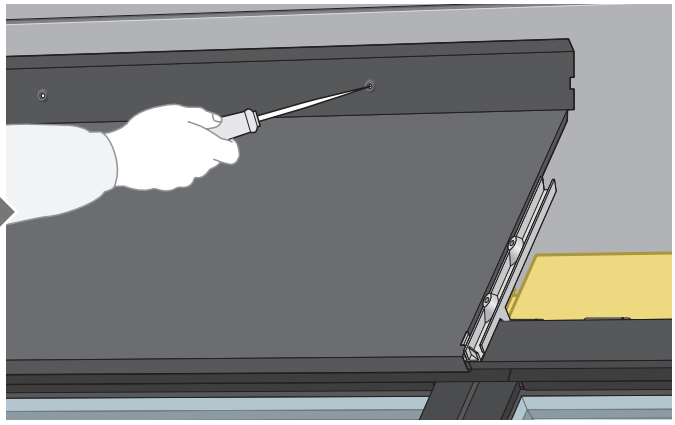

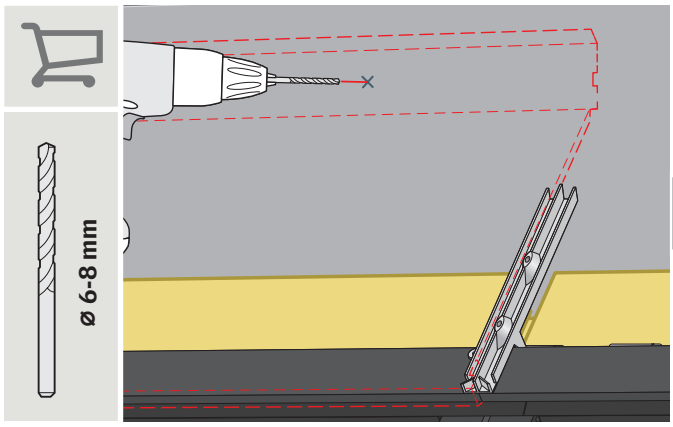
ø 6-8 mm

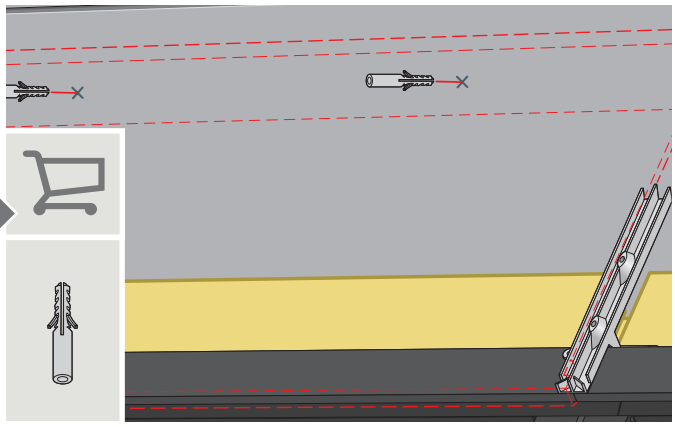

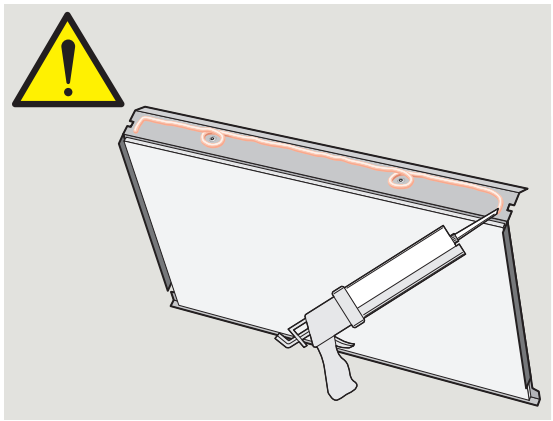

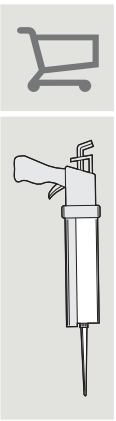

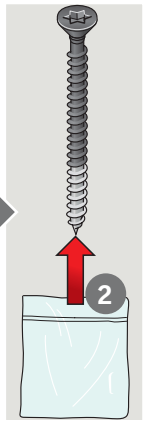
2

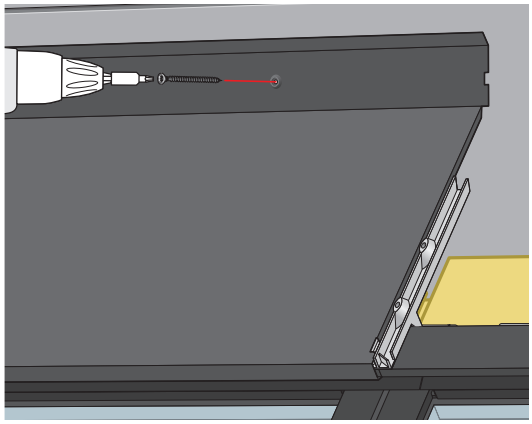

39

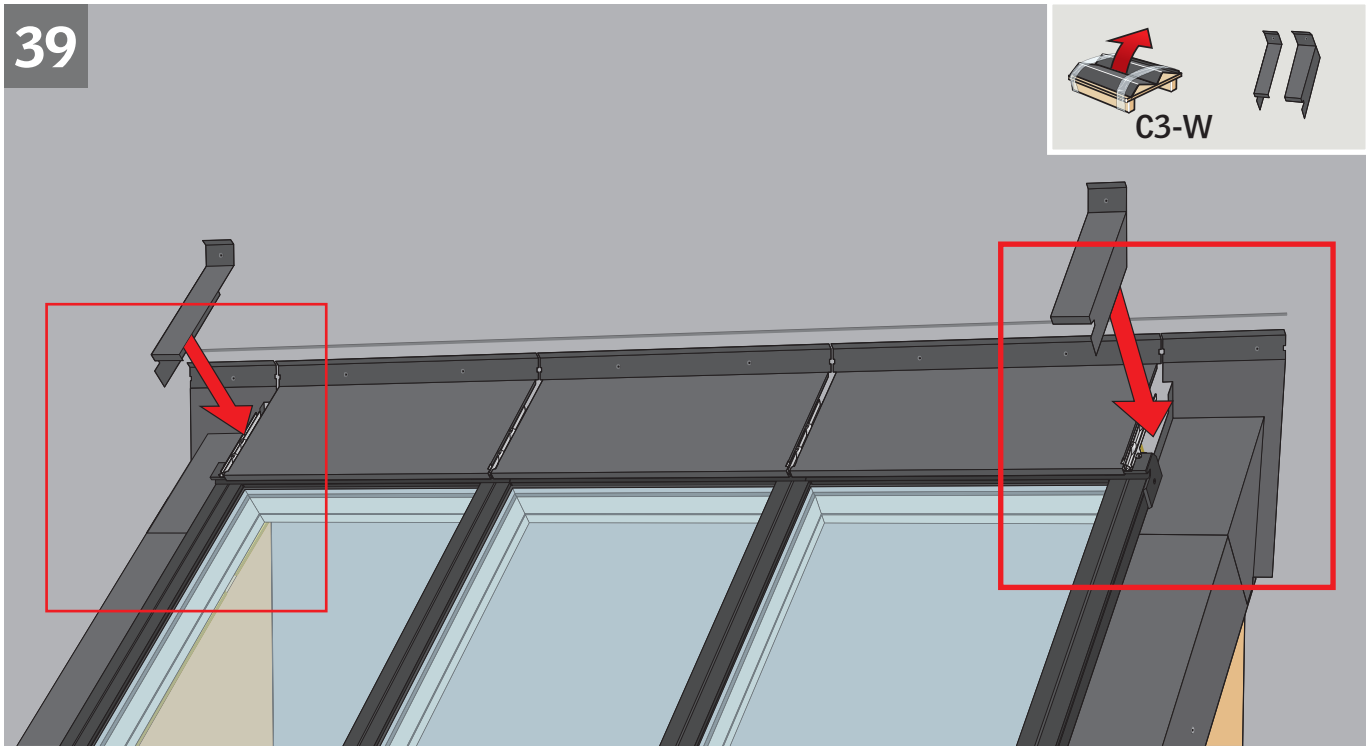

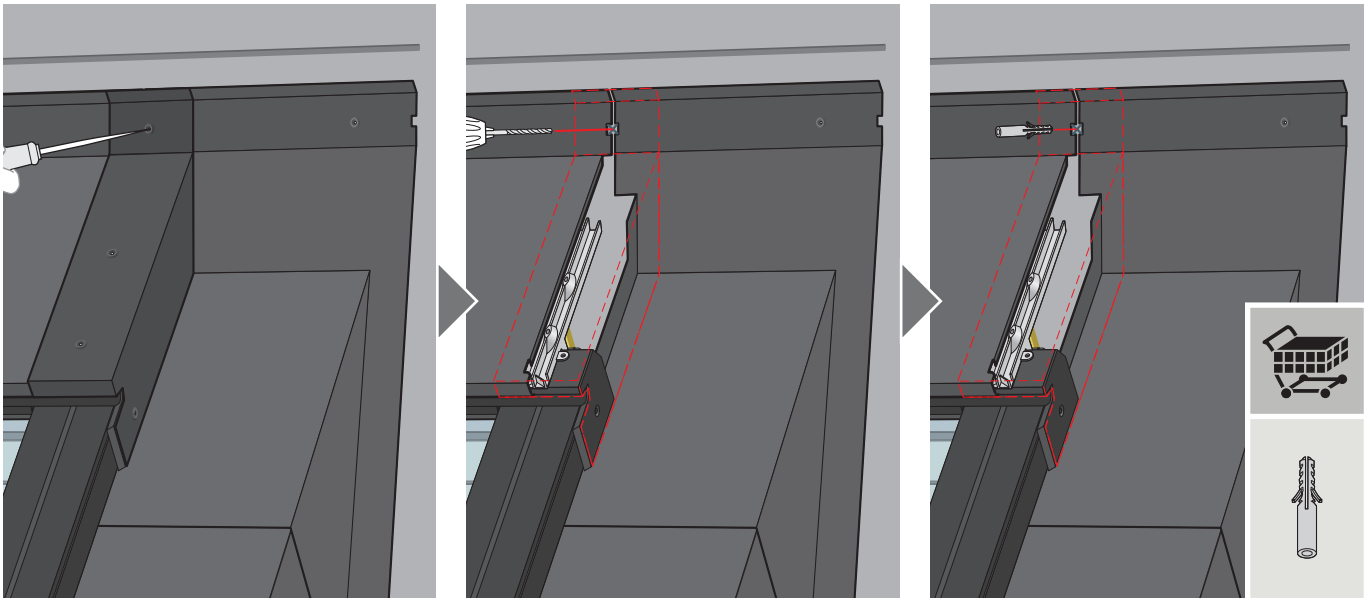

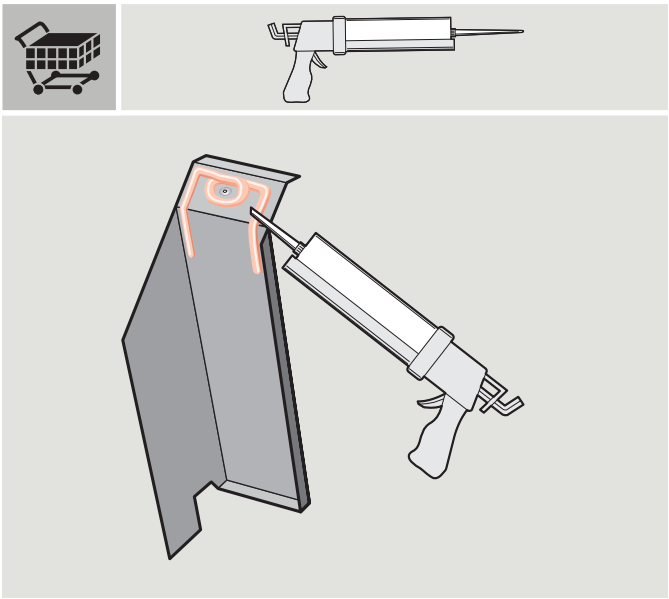

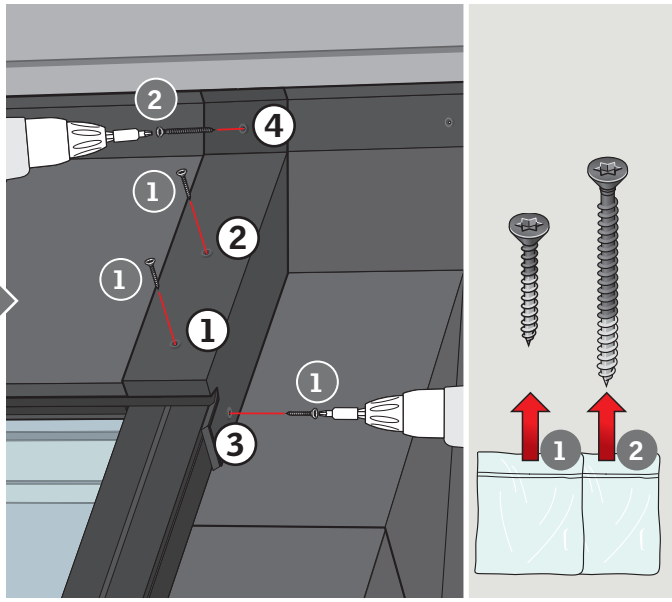

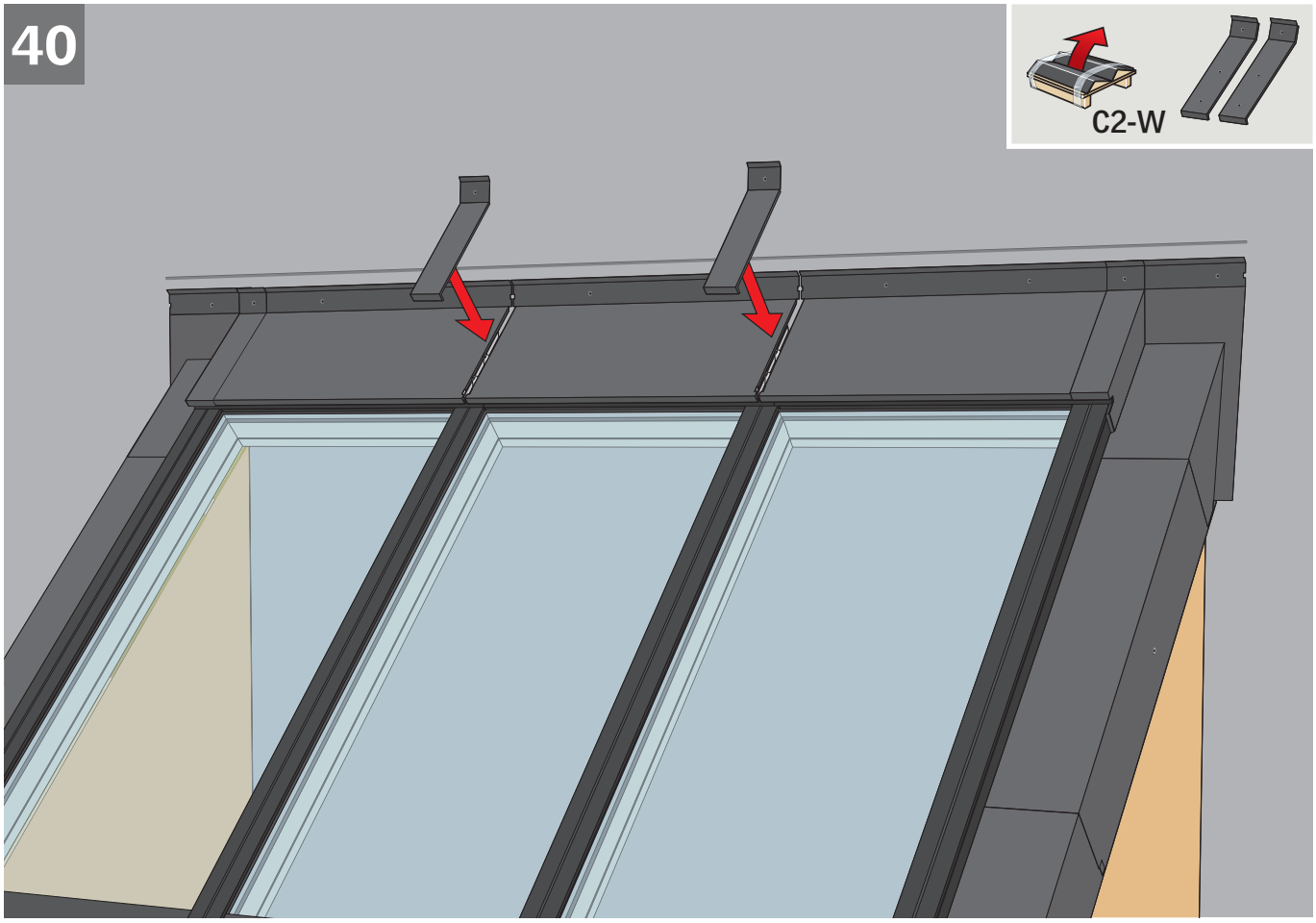
40
C2-W

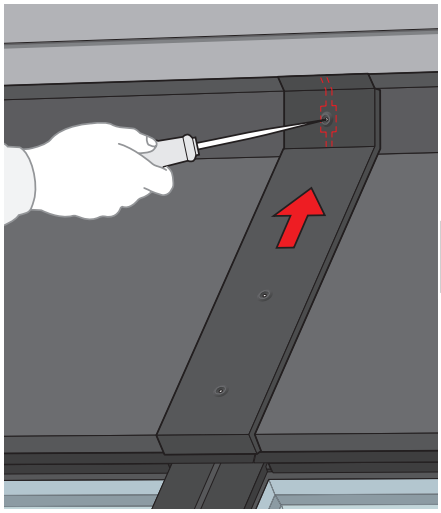

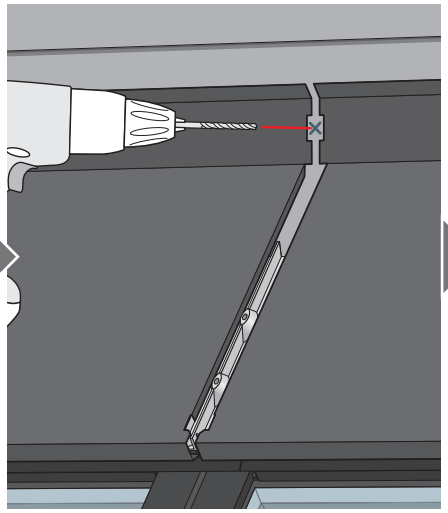

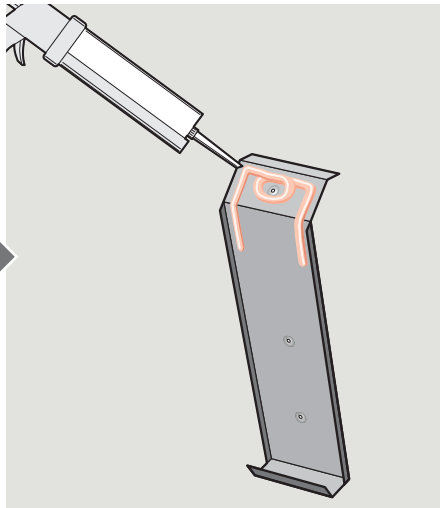

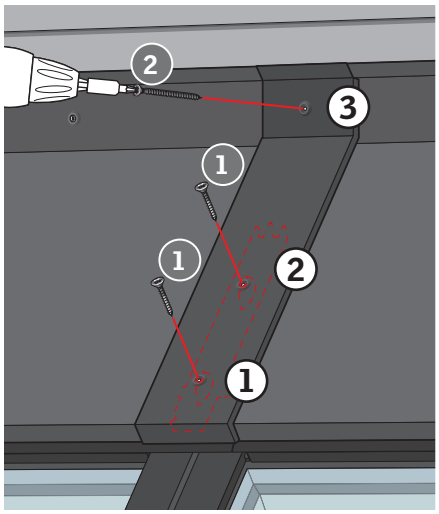
2
3
1
1
2
1

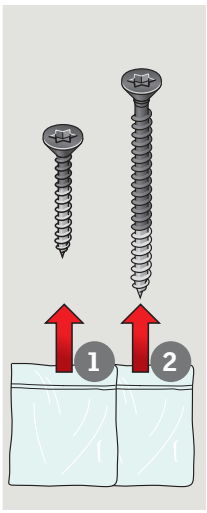
1
2

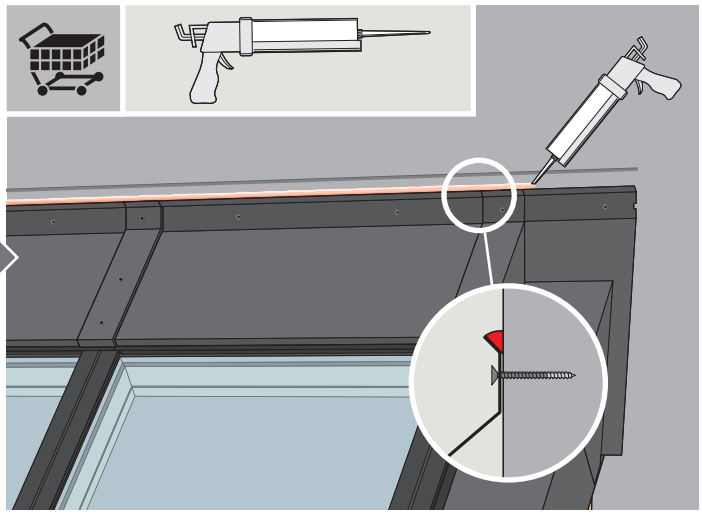

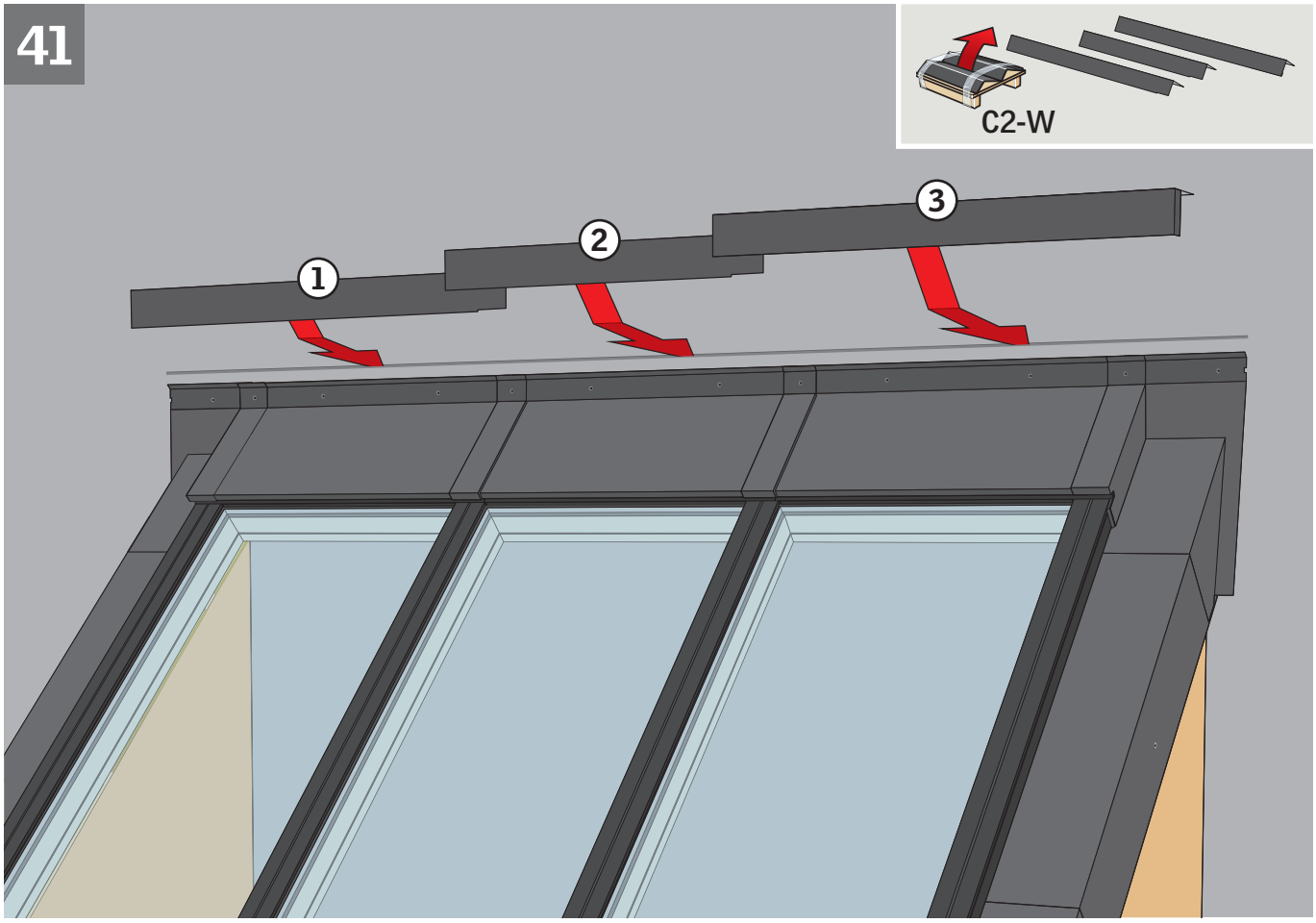
41
C2-W
1
2
3

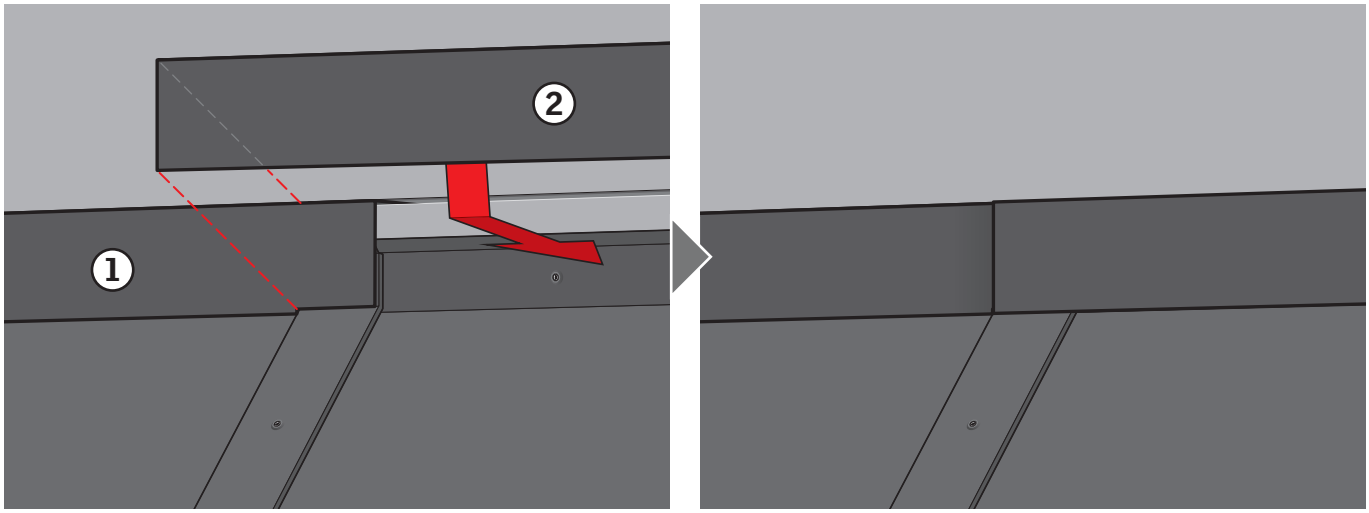
2
1

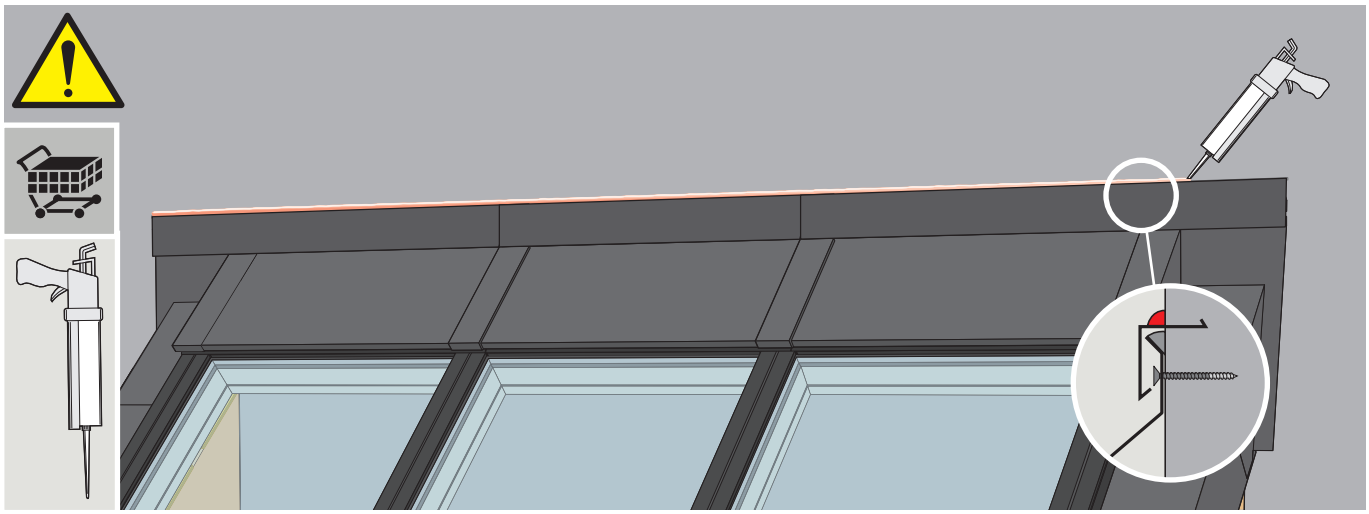

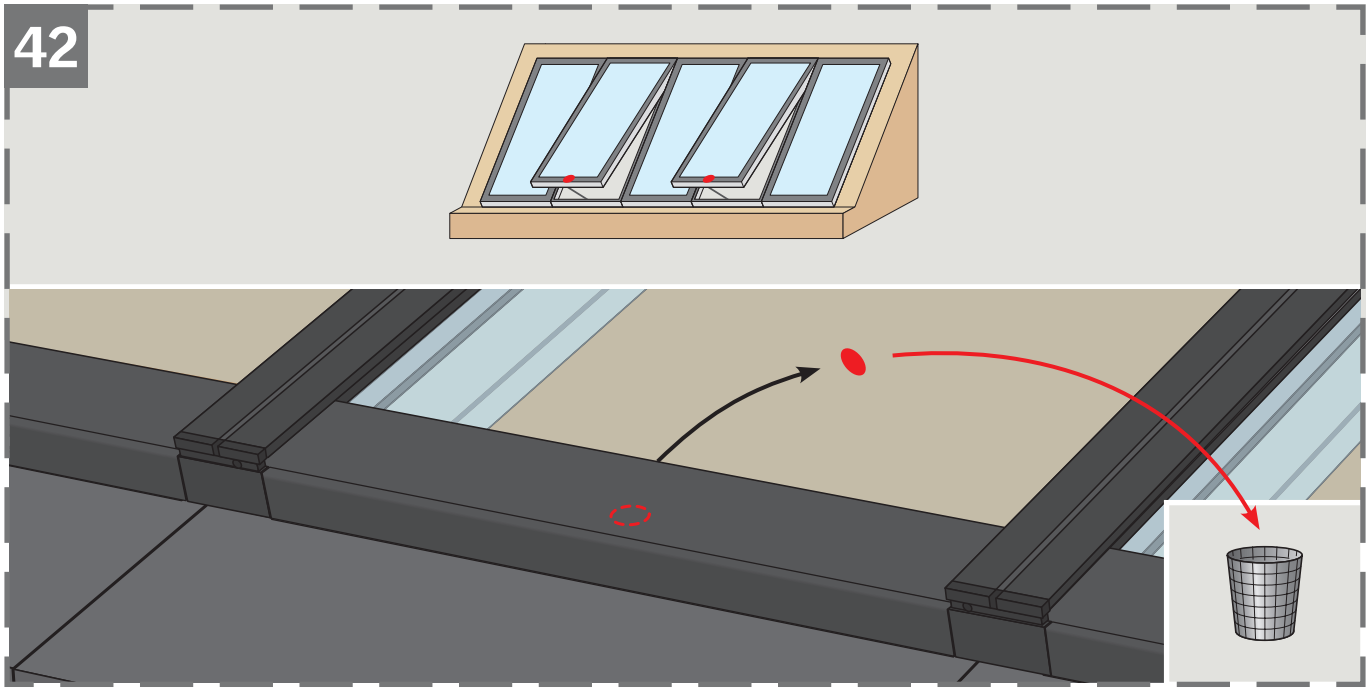
42

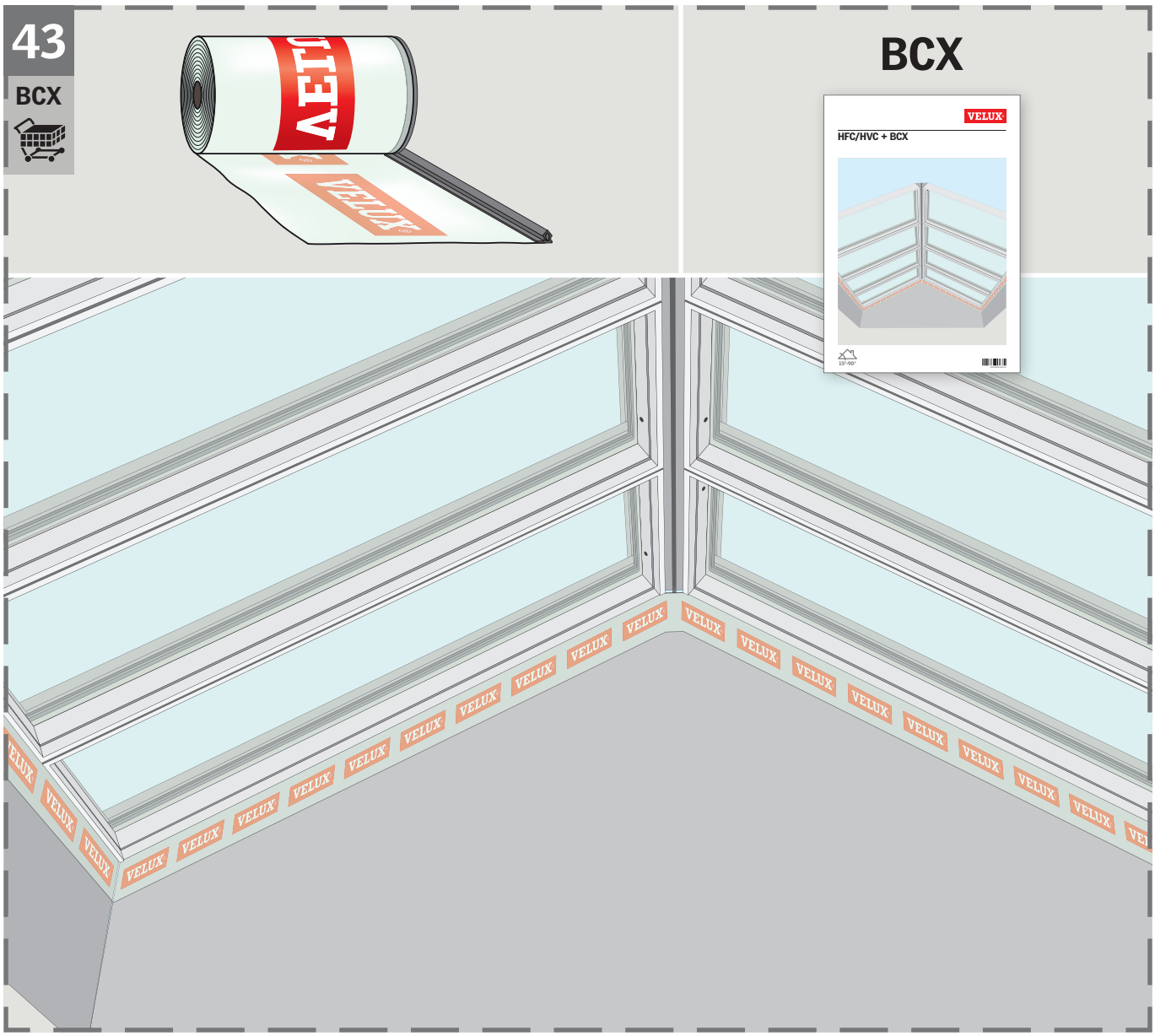
43
BCX
BCX
VELUX
HFC/HVC + BCX
VELUX

AR: VELUX Argentina S.A.
348 4 639944
AT: VELUX Österreich GmbH
02245/32 3 50
AU: VELUX Australia Pty. Ltd.
1300 859 856
BA: VELUX Bosna i Hercegovina d.o.o.
033/626 493, 626 494
BE: VELUX Belgium
(010) 42.09.09
BG: ВЕЛУКС България ЕООД
02/955 99 30
BY: Унитарное предприятие
"ВЕЛЮКС Мансардные Окна"
(017) 329 20 89
CA: VELUX Canada Inc.
1 800 88-VELUX (888-3589)
CH: VELUX Schweiz AG
062 289 44 45
CL: VELUX Chile Limitada
2 953 6789
CN: VELUX (CHINA) CO. LTD.
0316-607 27 27
CZ: VELUX Česká republika, s.r.o.
531 015 511
DE: VELUX Deutschland GmbH
01806 / 33 33 99
Festnetz: 0,20 €/Anruf
Mobilfunk: max. 0,60 €/Anruf
DK: VELUX Danmark A/S
45 16 45 16
EE: VELUX Eesti OÜ
621 7790
ES: VELUX Spain, S.A.
91 509 71 00
FI: VELUX Suomi Oy
0207 290 800
FR: VELUX France
0821 02 15 15
0,119€ TTC/min
GB: VELUX Company Ltd.
01592 778 225
HR: VELUX Hrvatska d.o.o.
01/5555 444
HU: VELUX Magyarország Kft.
(06/1) 436-0601
IE: VELUX Company Ltd.
01 848 8775
IT: VELUX Italia s.p.a.
045/6173666
JP: VELUX-Japan Ltd.
0570-00-8145
LT: VELUX Lietuva, UAB
(85) 270 91 01
LV: VELUX Latvia SIA
67 27 77 33
NL: VELUX Nederland B.V.
030 - 6 629 629
NO: VELUX Norge AS
22 51 06 00
NZ: VELUX New Zealand Ltd.
0800 650 445
PL: VELUX Polska Sp. z o.o.
(022) 33 77 000 / 33 77 070
PT: VELUX Portugal, Lda
21 880 00 60
RO: VELUX România S.R.L.
0-8008-83589
RS: VELUX Srbija d.o.o.
011 20 57 500
RU: ЗАО ВЕЛЮКС
(495) 640 87 20
SE: VELUX Svenska AB
042/20 83 80
SI: VELUX Slovenija d.o.o.
01 724 68 68
SK: VELUX Slovensko, s.r.o.
(02) 33 000 555
TR: VELUX Çatı Pencereleri
Ticaret Limited Şirketi
0 216 302 54 10
UA: ТОВ "ВЕЛЮКС Україна"
(044) 2916070
US: VELUX America LLC
1-800-88-VELUX

www.velux.com

INSTALLATION INSTRUCTIONS FOR VELUX MODULAR SKYLIGHT HFC/HVC + EWC. ©2014, 2016 VELUX GROUP ®VELUX AND THE VELUX LOGO ARE REGISTERED TRADEMARKS USED UNDER LICENCE BY THE VELUX GROUP